Oligopoly, Financial Structure and Bankruptcy Risk

Magali Pedro Costa*

CEFAGE-UE and ESTG, Instituto Politécnico de Leiria, Portugal

Cesaltina Pacheco Pires†

CEFAGE-UE and Departamento de Gestão, Universidade de Évora, Portugal

March 2014

Abstract

The aim of this paper is to analyze the equilibrium bankruptcy risk in a two-stage duopoly model, where firms decide their financial structure in the first stage of the game and take their output market decisions in the second stage of the game. Using the framework of Brander and Lewis (1986) we show that the bankruptcy risk depends on the financial structure and output market decisions. We analyze the impact of changing the parameters of the model (level of demand uncertainty, parameters that affect both firms and firm specific parameters) on the equilibrium bankruptcy probabilities. This analysis is done both for the equilibrium in the second stage of the game (for fixed debt levels) as well as for the subgame perfect equilibrium. We show that the bankruptcy risk depends both on the exogenous level of uncertainty and on the financial structure and product market equilibrium decisions. In other words, great part of the bankruptcy risk is endogenously determined.

Keywords: Capital structure; Product market competition; Bankruptcy risk

JEL classification: D43; G32; L13

*magali.costa@ipleiria.pt

†cpires@uevora.pt

CEFAGE-UE, Universidade de Évora

Palácio do Vimioso (Gab. 224)

Largo Marquês de Marialva, 8

7000-809 Évora, Portugal

Phone: (+351) 266 706 581

1 Introduction

Bankruptcy has negative social and economic consequences which explains why many researchers are interested in finding the best form to predict the bankruptcy risk. Although there exists a proliferation of models to predict financial distress risk (for a recent survey of the empirical literature see Balcaen and Ooghe, 2006), there is a lack of theoretical models for explaining bankruptcy probability. However the development of theoretical models aimed at deriving the equilibrium bankruptcy probability may provide important insights and guide future empirical work on financial distress. The main objective of this paper is to provide a contribution in this direction.

The paper derives the equilibrium bankruptcy probabilities in a model with an uncertain environment where firms first take their financing decisions and later take their product market decisions. In addition, we analyze the impact of changing certain parameters on the bankruptcy probabilities. This analysis is done both for the second stage equilibrium (considering the financial structure as given but taking into account the impact on the output market decisions) as well as for the subgame perfect equilibrium (i.e., taking into account the impact on the financial structure decisions as well as on the product market decisions). We believe that both analyses are interesting as the two effects may not have the same sign and their distinction may be important for empirical work.

The link between the financial structure and output market decisions has been highlighted both on the Corporate Finance literature and the Industrial Organization literature.[1] Brander and Lewis (1986) were the first to examine the relationship between financial decisions and output market competition. They consider a two stage Cournot duopoly model with an uncertain environment. In the first stage, each firm decides the capital structure. In the second stage, taking into account their previously chosen financial structure, firms take their decisions on the output market.[2] Brander and Lewis (1986) conclude that debt tends to encourage a more aggressive behavior in the output market.Thus firms have an incentive to use their financial structure for strategic purposes. Maksimovic (1988) confirms the findings of Brander and Lewis (1986)

[1] Riordan (2003) presents a critical survey that summarizes the existing literature on the interaction between capital structure and output market. The author argues that the capital market restrictions depend on the output market competition.

[2] Like Brander and Lewis (1986), we ignore the physical investment decision. This is equivalent to assume that the investment decision is taken before the capital structure decision. If this assumption was not made, the debt-equity mix choice would influence the investment which would have further effects on the output market. This happens in Clayton (2009) where the investment is made to reduce the marginal cost of production. As pointed out by Brander and Lewis (1986) one possible interpretation of the capital structure choice is that the firm is initially equity financed, when the loan is taken the borrowed money is fully distributed to shareholders.

regarding the aggressiveness of indebted firms in the output market, which is due, according to the authors, to the existence of limited liability.[3]

While Brander and Lewis (1986) present a general model, without specifying whether products are homogenous or differentiated and whether uncertainty affects demand or costs, other authors have explored more specific models and analyzed the impact of changes in parameters such as the level of uncertainty and the level of substitutability among products, on the equilibrium output and debt levels. This type of approach is followed by Wanzenried (2003), Frank and Le Pape (2008) and Haan and Toolsema (2008) who analyze a two-stage differentiated goods duopoly model with demand uncertainty.[4] Frank and Le Pape (2008) only analyze Cournot competition whereas Haan and Toolsema (2008) use numerical analysis to study how the equilibrium is affected by demand uncertainty and the substitutability of products both under Cournout and Bertrand competition.

Our paper extends Brander and Lewis (1986) by analyzing the implications of financial structure decisions and output market decisions on the bankruptcy probability and also by studying the impact, at a very general level, of changes in the parameters on the equilibrium. There are two important contributions of our work. The first is that while Brander and Lewis focus on the implications on the output market of financial structure decisions, our emphasis is in showing that the bankruptcy risk depends both on financial structure and output market decisions. The second contribution is that we analyze the impact of changes in the level of demand uncertainty, changes in parameters that are common to the two firms (such as the dimension of the market and the degree of product differentiation) and changes in parameters that are firm specific (such as the marginal costs) on the equilibrium.

It should be noted that the bankruptcy risk has been addressed in the work of Frank and Le Pape (2007) and Haan and Toolsema (2008) using numerical simulations. However, these authors only analyzed the impact of demand uncertainty and the degree of product differentiation on the

[3] It should be highlighted that the existing empirical work relating financial and output market decisions clearly confirms the strategic role of debt on the output market. However the sign of the impact of greater leverage on the output market is not so clear-cut. For instance, Chevalier (1999) examines the impact of supermarket Leveraged Buyouts (LBOs) in the product market. She concludes that the announcement of a LBO leads to an increase in the expected profit of rival firms and to a less aggressive behavior in the output market, a conclusion that goes against the results of Brander and Lewis (1986). On the contrary, the results of Guney et al (2011) support the theory of aggressive behavior by most indebted firms. Interestingly, Campos (2000) shows that limited liability firms which have higher short-term debt behave more aggressively in the output market but the long-term debt has the opposite effect, suggesting that the output market reaction may depend on the type of debt.

[4] As pointed out by Frank and Le Pape (2008) and Toolsema and Haan (2008), the work of Wanzenried (2003) has a technical mistake when, in the second stage of the game, considers the bankruptcy risk as given instead of considering the debt levels as given. In fact, the bankruptcy risk depends on the output market decisions and therefore it should be endogenously determined in the second stage of the game.

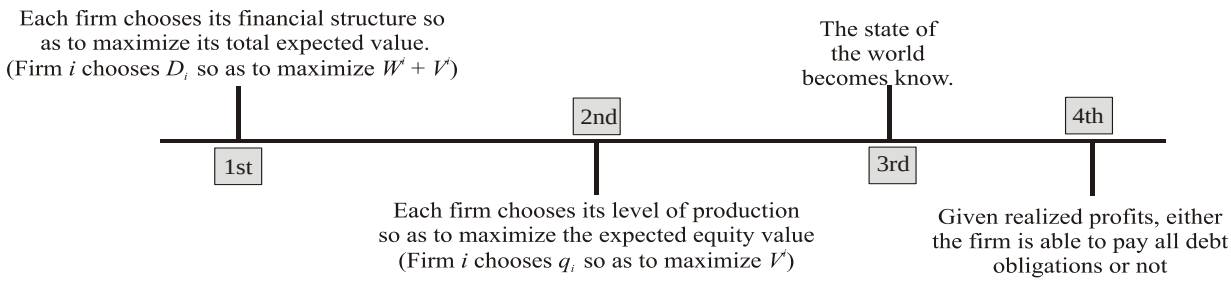

Figure 1: Timing of the game: first financial decisions are taken, next output decisions are taken. Output decisions are taken before the uncertainty is resolved.

probability of bankruptcy risk in a duopoly model with linear demands and constant marginal costs. The aim of this paper is the generalization of the previous work by analyzing the explicit impact of parameters that affect all the firms and the impact of parameters that only affect one firm. The aim is to analyze how these parameters affect the equilibrium financial structure, the equilibrium level of output, and the corresponding bankruptcy risk.[5]

The remainder of the paper is organized as follows. In the next section we present the model. Section 3 analyzes the second stage of the game. In this section we also study how changes in the parameters influence the equilibrium bankruptcy risk in the second stage of the game, assuming fixed debt levels. The next section derives the subgame perfect equilibrium and studies how changes in the parameters affect the equilibrium financial and output market decisions and the equilibrium bankruptcy risk. Finally, section 5 summarizes the main conclusions of the paper.

2 Model

Based on the formalization presented by Brander and Lewis (1986), we consider a two stage duopoly Cournout model[6]. In the first stage each firm (firm i and firm j) decides the financial structure, i.e., the level of debt and equity in the capital structure. In the second stage each firm takes its decision on the output market. Figure **??** shows the timing of the game.

Let q_i and q_j be the output of firms i and j, respectively and $R^i(q_i, q_j, z_i, \gamma, \alpha_i)$ be the

[5] In the works presented above, we are highlighted the findings of authors whose underlying analysis is competition in quantities (strategic substitutes). With regard to price competition (strategic complements) we highlight the work of Showalter (1995) and Haan and Toolsema (2008). Showalter (1995) argues that the strategic use of debt is advantageous only if there is uncertainty in demand. Haan and Toolsema (2008) conclude that the increase in debt leads to an increase in price.

[6] We consider a duopoly Cournot model with two firms for the sake of simplicity in modeling. The generalization is possible, but complex for the general case.

operating profit for firm i. $R^i(q_i, q_j, z_i, \gamma, \alpha_i)$ is defined as the difference between revenue and variable cost and depends on the random variable z_i , parameter γ which affects both firms (such as the degree of product differentiation or the dimension of the market) and parameter α_i which affects only firm i (such as the firm's marginal cost).[7] It should be highlighted that our formalization considers explicitly the impact of the parameters on R^i so as to allow us to analyze the impact of changes in these parameters, an issue which was not explored by Brander and Lewis (1986).

The random variable z_i represents the uncertainty in the output market, i.e the deviation from the average market demand (this deviation can be positive or negative). It is assumed that this variable is distributed on the interval $[-\overline{z}; \overline{z}]$ according to density function $f(z_i)$, which we assume to be positive for all $z_i \in [-\overline{z}; \overline{z}]$. We assume that z_i and z_j are independent and identically distributed.

We assume that $R^i(q_i, q_j, z_i, \gamma, \alpha_i)$ follows some standard proprieties: $R^i_{ii}(q_i, q_j, z_i, \gamma, \alpha_i) < 0$; $R^i_{ij}(q_i, q_j, z_i, \gamma, \alpha_i) < 0$. Condition $R^i_{ii}(q_i, q_j, z_i, \gamma, \alpha_i) < 0$ indicates that the marginal profit function is negatively sloped or, equivalently, the profit function of the firm is concave on its own quantity. Condition $R^i_{ij}(q_i, q_j, z_i, \gamma, \alpha_i) < 0$ implies that we have strategic substitutes, that is, when firm j increases its quantity the optimal quantity of firm i decreases. In addition, we assume that $R^i_{z_i} > 0$ which means that high values of z_i contribute to higher operating profit. That is, higher values of z_i correspond to better states of the world. There are two possible cases: $R^i_{iz_i} > 0$ (this is consistent with a situation where marginal profit is higher in better states of the world), and $R^i_{iz_i} < 0$ (this means that good states of the world correspond to lower marginal profit). In the remaining of the paper we will consider the case of $R^i_{iz_i} > 0$, which is the case if z_i is interpreted as demand uncertainty and higher values of z_i correspond to higher demand.

In the first stage of the game each firm chooses the financial structure that maximizes the value of the firm, taking into account that this choice will affect the equilibrium in the second stage of the game. While the financial structure choice is done so as to maximize the sum of the equity value and the debt value, the quantity choice in the second stage of the game is done so as to maximize the expected value of equity.

In order to find the subgame perfect equilibrium of the game we solve the game backwards. We start by computing the Nash equilibrium of the second stage game as a function of the debt level chosen by the firms in the first stage. Next we solve the first stage game. In this stage firms take their financing decisions considering their impact on the output market equilibrium.

[7] We could consider a more general formalization where γ and α_i are vectors of parameters. However the qualitative results would be the same and thus, to simplify notation, we consider the case where γ and α_i are single parameters.

Since our work uses Brander and Lewis (1986) framework, some of our results just replicate their results. In these cases we explicitly acknowledge this fact. The remaining results have not been proved before in a general model like ours.

3 Nash equilibrium in the second stage game

This section examines the second stage of the game, considering the debt levels D_i and D_j chosen by the firms in the first stage of the game. In the second stage of the game, each firm chooses the output level that maximizes the expected value of the firm to the shareholders. We start by analyzing the equilibrium in the output market and investigate how the output market decisions change with the debt levels D_i and D_j chosen by the firms in the first stage of the game as well as with changes on the other parameters of the model. Next, we determine the second stage equilibrium default probabilities and again investigate how they change with the debt levels D_i and D_j chosen by the firms in the first stage of the game as well as with changes on the uncertainty level and the other parameters of the model.

3.1 Output Market Equilibrium

In the second stage of the game the manager maximizes the expected value of the firm to shareholders. The expected equity value is given by:

$$V^i(q_i, q_j, D_i, \overline{z}, \gamma, \alpha_i) = \int_{\widehat{z}_i(q_i, q_j, D_i, \gamma, \alpha_i)}^{\overline{z}} (R^i(q_i, q_j, z_i, \gamma, \alpha_i) - D_i) f(z_i) dz_i$$

where D_i represents the debt obligation of firm i, and $\widehat{z}_i(q_i, q_j, D_i, \gamma, \alpha_i)$ is the critical value of z_i such that operating profit of the firm is just enough for the firm to meet its debt obligations. This critical state of the world is implicitly defined by:

$$R^i(q_i, q_j, \widehat{z}_i, \gamma, \alpha_i) - D_i = 0 \qquad \text{for} \quad -\overline{z} \leq \widehat{z}_i \leq \overline{z}. \tag{1}$$

Hence $V^i(q_i, q_j, D_i, \overline{z}, \gamma, \alpha_i)$ corresponds to expected profit net of debt obligations in good states of the world ($z_i \geq \widehat{z}_i$). In bad states of the world, $z_i < \widehat{z}_i$, shareholders earn zero as all its operating profit is paid to debtholders. [8]The existence of limited liability means that, if there are financial difficulties, only the assets and the results from these, will serve as colateral for the debt fulfillment. So, when we are dealing with the bad states of nature, equity holders will

[8]If condition (1) does not hold for any $-\overline{z} \leq \widehat{z}_i \leq \overline{z}$ that means that either the firm is always able to meet its debt obligations or that it is never able to do so, which is equivalent to consider $\widehat{z}_i = -\overline{z}$ and $\widehat{z}_i = \overline{z}$, respectively. In the remaining of the paper we focus in the case where the critical state is in the interior of $[-\overline{z}; \overline{z}]$.

not receive any income, but they do not have the obligation to pay the amount of debt incurred with personal property.

It is useful to know how the critical value, $\widehat{z}_i$, changes with q_i, q_j, D_i. The following result, which was proved by Brander and Lewis (1986), tells us the sign of these effects:

Lemma 1 ***(Brander and Lewis, 1986)*** *The critical state of nature, $\widehat{z}_i$, is increasing with firm i's debt, D_i, and with firm j's quantity, q_j. Moreover, the critical state of nature, $\widehat{z}_i$, is increasing with q_i if and only if $R_i^i(\widehat{z}_i) < 0$.*

Similarly, it is useful to determine how the critical state of nature, $\widehat{z}_i$, changes with the parameters γ and α_i:

Lemma 2 *The impact of γ and α_i on $\widehat{z}_i$ has the the opposite sign of $R_\gamma^i(\widehat{z}_i)$ and $R_{\alpha_i}^i(\widehat{z}_i)$, respectively.*

The optimal output for firm i is given by the first order condition that the partial derivative of V^i with respect to q_i is equal to zero. By Leibniz rule this is equal to:

$$V_i^i(q_i, q_j, D_i, \overline{z}, \gamma, \alpha_i) = \int_{\widehat{z}_i(q_i, q_j, D_i, \gamma, \alpha_i)}^{\overline{z}} R_i^i(q_i, q_j, z_i, \gamma, \alpha_i) f(z_i) dz_i - (R^i(q_i, q_j, \widehat{z}_i, \gamma, \alpha_i) - D_i) f(\widehat{z}_i) \frac{\partial \widehat{z}_i}{\partial q_i} = 0$$

Where V_i^i denotes the partial derivative of V^i with respect to q_i. However, by definition of $\widehat{z}_i$, the second term is equal to zero. Thus the first order condition is given by:

$$V_i^i(q_i, q_j, D_i, \overline{z}, \gamma, \alpha_i) = \int_{\widehat{z}_i(q_i, q_j, D_i, \gamma, \alpha_i)}^{\overline{z}} R_i^i(q_i, q_j, z_i, \gamma, \alpha_i) f(z_i) dz_i = 0 \tag{2}$$

It should be noted that the previous condition takes into account the endogeneity of $\widehat{z}_i$ which depends on the quantities chosen by the two firms. Condition (2) tells us that, the optimal quantity is such that the expected marginal profit in good states of the world is equal to zero. Note that if $R_{iz_i}^i > 0$, marginal profit (R_i^i) is increasing with z_i, thus marginal profit is negative at $\widehat{z}_i$ but positive at $\overline{z}$. The left panel of Figure 2 shows the marginal profit for the optimal quantity when $R_{iz_i}^i > 0$.

The second order conditions are satisfied if (using Leibniz rule again):

$$V_{ii}^i = \int_{\widehat{z}_i}^{\overline{z}} R_{ii}^i(q_i, q_j, z_i, \gamma, \alpha_i) f(z_i) dz_i - R_i^i(q_i, q_j, \widehat{z}_i, \gamma, \alpha_i) f(\widehat{z}_i) \frac{\partial \widehat{z}_i}{\partial q_i} < 0$$

It should be noted that, under the assumption that $R_{iz_i}^i > 0$, the term $-R_i^i(q_i, q_j, \widehat{z}_i, \gamma, \alpha_i) f(\widehat{z}_i) \frac{\partial \widehat{z}_i}{\partial q_i}$ is positive since $R_i^i(\widehat{z}_i) < 0$ and $\frac{\partial \widehat{z}_i}{\partial q_i} = -\frac{R_i^i(\widehat{z}_i)}{R_{z_i}^i(\widehat{z}_i)} > 0$. This implies that the previous condition is

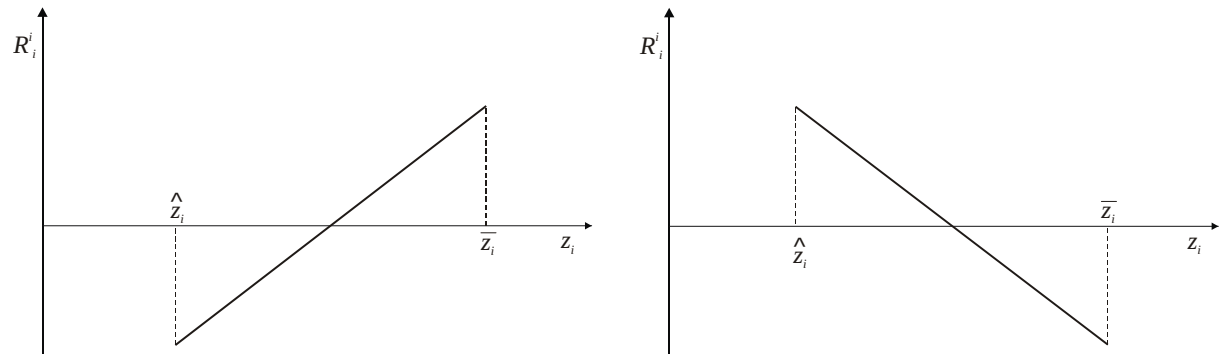

Figure 2: Marginal profit of firm i, R^i_i, as a function of z_i for the optimal quantity: expected marginal profit in good states of the world is equal to zero. Marginal profit when $R^i_{iz_i} > 0$ (left panel), when $R^i_{iz_i} < 0$ (right panel).

harder to satisfy than in traditional games where imposing the concavity of the profit function is enough. In what follows we assume $V^i_{ii} < 0$. In addition we assume that $V^i_{ij} < 0$, which means that quantities are strategic substitutes. Finally we assume that $V^i_{ii}V^j_{jj} - V^i_{ij}V^j_{ji} > 0$, which guarantees that the Nash equilibrium of the quantities game is unique.

The Nash equilibrium is given by the solution of the system of first order conditions:

$$\begin{cases} V^i_i(q_i, q_j, D_i, \overline{z}, \gamma, \alpha_i) = 0 \\ V^j_j(q_i, q_j, D_j, \overline{z}, , \gamma, \alpha_j) = 0 \end{cases} \Leftrightarrow \begin{cases} \displaystyle\int_{\widehat{z}_i(q_i, q_j, D_i, \gamma, \alpha_i)}^{\overline{z}} R^i_i(q_i, q_j, z_i, \gamma, \alpha_i) f(z_i) dz_i = 0 \\ \displaystyle\int_{\widehat{z}_j(q_i, q_j, D_j, \gamma, \alpha_j)}^{\overline{z}} R^j_j(q_i, q_j, z_j, \gamma, \alpha_j) f(z_j) dz_j = 0 \end{cases} \tag{3}$$

where $\widehat{z}_i$ and $\widehat{z}_j$ are implicitly defined by $R^i(q_i, q_j, \widehat{z}_i, \gamma, \alpha_i) - D_i = 0$ and $R^j(q_i, q_j, \widehat{z}_j, \gamma, \alpha_j) - D_j = 0$, respectively. Let $q^*_i(D_i, D_j, \gamma, \alpha_i, \alpha_j, \overline{z})$ and $q^*_j(D_i, D_j, \gamma, \alpha_i, \alpha_j, \overline{z})$ be the solution of this system. In other words, q^*_i and q^*_j are the equilibrium quantities in the output market.

One important result which was derived first by Brander and Lewis (1986) is:

Proposition 1 ***(Brander and Lewis, 1986)*** *If $R^i_{iz_i} > 0$, a unilateral increase in firm i's debt, D_i, leads to an increase in the equilibrium quantity of firm i, q^*_i, and to a decrease in the equilibrium quantity of firm j, q^*_j.*

The previous result means that debt financing leads the firm to behave more aggressively in the output market. Intuitively, when a firm has an higher debt level, the firm will be able to repay its obligations in a smaller set of states of the world ($\widehat{z}_i$ increases). Since equityholders only care about good states of the world, $z_i > \widehat{z}_i$, an increase in the firm's debt increases the

expected marginal profits conditional on $z_i > \widehat{z}_i$, which leads to an increase in the optimal quantity.

It may also be interesting to know how the equilibrium quantities change with changes in the level of uncertainty (measured by $\overline{z}$) or with the change in some parameter γ and α_i for given levels of D_i and D_j. This analysis was not done by Brander and Lewis (1986) but it is helpful to have a more complete characterization of the output market decisions when the financial structure is fixed.

Let us start by analyzing the impact of changes in the level of uncertainty. One interpretation of this exercise, would be to consider a change on the uncertainty level occurring after the first period financing decisions but before the output decisions.

Lemma 3 *If $R^i_{iz_i} > 0$, for fixed debt levels, an increase in the level of uncertainty, $\overline{z}$, causes an increase in firm i's equilibrium quantity, q^*_i, if and only if $V^j_{jj}V^i_{i\overline{z}} - V^i_{ij}V^j_{j\overline{z}} < 0$. Moreover, if firms are symmetric $\left(V^i_{i\overline{z}} = V^j_{j\overline{z}}\right)$ and $V^j_{jj} < V^i_{ij}$, an increase in the level of uncertainty leads to an increase in q^*_i.*

This means that, for fixed debt values, the higher is the level of uncertainty, the more aggressive will firms be in the output market. Intuitively, the increase in the uncertainty level implies that there are more good states with positive marginal profits, thus the expected marginal profits conditional on $z_i > \widehat{z}_i$ increase, hence it is optimal to produce an higher quantity (note that increasing $\overline{z}$ also means that there are states of the world with more negative marginal profits, but equityholders do no care about these states of the world, unless the firm is all equity financed).[9]

Let us now study the impact of changes in parameters that affect the two firms on the output market equilibrium, for given D_i and D_j.

Lemma 4 *If $R^i_{iz_i} > 0$, for fixed debt levels an increase in the common parameter γ, causes a change in firm i's equilibrium quantity, q^*_i, with the opposite sign of $\left(V^j_{jj}V^i_{i\gamma} - V^i_{ij}V^j_{j\gamma}\right)$. Moreover, if firms are symmetric and $V^j_{jj} < V^i_{ij}$, $\frac{\partial q^*_i}{\partial \gamma}$ has the same sign as $V^i_{i\gamma}$. Thus q^*_i increases if and only if the marginal equity value in the good states of the world is increasing with γ. The sign of $V^i_{i\gamma}$ is ambiguous if γ affects in the same direction the profit and the marginal profit, i.e., if R^i_{γ} and $R^i_{i\gamma}$ have the same sign. If R^i_{γ} and $R^i_{i\gamma}$ have opposite signs, the sign of $V^i_{i\gamma}$ is the same as the sign of $R^i_{i\gamma}$.*

[9] **The interpretation of $V^j_{jj} < V^i_{ij}$ is that the impact of increasing the output of firm j in marginal equity value is higher than the impact of increasing the output of firm i.**

It should be noted that the most natural case is when the impact of the parameter on profits and on marginal profits go in the same direction. For instance, if γ is the dimension of the market, in a model with linear demands, increases in γ lead to higher profit and to higher marginal profit. Thus, $R^i_{i\gamma} > 0$ and $R^i_{\gamma} > 0$. Since $R^i_i(\widehat{z}_i) < 0$, the second term is negative while the first is positive. Thus the sign of $V^i_{i\gamma}$ depends on which of these two effects dominates. Figure 3 illustrates the two effects of changing γ on the expected marginal profit, conditional on $z_i > \widehat{z}_i$, when $R^i_{i\gamma} > 0$ and $R^i_{\gamma} > 0$. The first effect is represented in light grey, while the second effect is represented in dark grey. In the figure the first effect dominates (area in light grey is larger than area in dark grey). Thus in the case illustrated in the figure an increase in γ would lead to an increase in the equilibrium quantity levels.

It is interesting to explore a little bit further the two effects when $R^i_{i\gamma}$ and R^i_{γ} have the same sign. For a firm without debt, only the first effect is present and thus, when $R^i_{i\gamma} > 0$, the optimal quantity increases. The first effect is likely to continue to dominate for low debt levels, as the set of non-bankruptcy states is large (the probability of default is low) and thus the increase on the expected marginal profit conditional on $z_i > \widehat{z}_i$ is large. Hence, for relatively low debt values, the existence of a limited liability effect, leads to a smaller impact of γ on the equilibrium quantities than in the absence of the limited liability effect, but the impact has the same sign than in standard oligopoly models. However, for very high debt levels, the equityholders only care about extremely good states of nature and consequently the first effect has a small magnitude. Thus, for high debt levels, it seems possible that the second effect dominates. Since $R^i_{\gamma} > 0$, an increase in γ implies that the critical state of nature becomes lower, hence shareholders care about more states of nature, which may lead to a less aggressive behavior in the output market. When the second effect dominates, the impact of changes in γ on the equilibrium quantities is precisely the opposite of what happens in standard oligopoly models. In other words, for high debt levels we may obtain unexpected results due to the limited liability effect.

Finally, let us determine the change in the equilibrium quantities with changes in α_i.

Lemma 5 *If $R^i_{iz_i} > 0$, for fixed debt levels an increase in firm i's parameter α_i, causes a change in firm i's equilibrium quantity, q^*_i, with the same sign as $V^i_{i\alpha_i}$ and a change in q^*_j with the opposite sign of $V^i_{i\alpha_i}$. Thus q^*_i increases (and q^*_j decreases) if and only if the marginal equity value in the good states of the world is increasing with α_i. The sign of $V^i_{i\alpha_i}$ is ambiguous if α_i affects in the same direction the profit and the marginal profit, i.e., if $R^i_{\alpha_i}$ and $R^i_{i\alpha_i}$ have the same sign. If $R^i_{\alpha_i}$ and $R^i_{i\alpha_i}$ have opposite signs, the sign of $V^i_{i\alpha_i}$ is the same as the sign of $R^i_{i\alpha_i}$.*

The previous results implies that a change in firm i's parameter, α_i, always has opposite impacts on q^*_i and q^*_j.

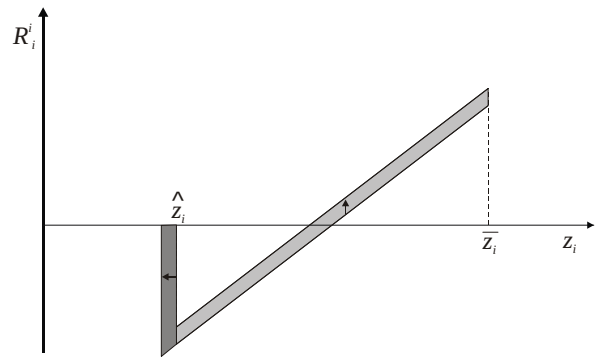

Figure 3: The impact of an increase in γ in the expected marginal profit when $R^i_{i\gamma} > 0$ and $R^i_{\gamma} > 0$. Since $R^i_{i\gamma} > 0$, an increase in γ increases expected marginal profit (area in light grey). Since $R^i_{\gamma} > 0$, $\widehat{z}_i$ decreases, which leads to a decrease in the expected marginal profit (area in dark grey).

One example, where the previous results applies is when α_i is the marginal cost of firm i. In this case, profit and marginal profit are both decreasing with the firm marginal cost. Thus the impact of a change in marginal cost in the firm own production is ambiguous. On the one hand the fact that expected marginal profit in good states of the world becomes lower, tends to decrease the optimal quantity. On the other hand an increase in the marginal costs decreases the profit in all the states of the world and thus it increases the critical state of nature $\widehat{z}_i$, which leads to a more aggressive behavior by the firm. If the last effect dominates, an increase in the marginal costs of firm i leads to an higher q_i^*, which is the opposite of what happens in standard oligopoly model where the limited liability effect is not considered. As explained above, the second effect is more likely to dominate when the firm has high levels of debt.

3.2 Equilibrium default probabilities

In this subsection we analyze the equilibrium default probabilities in the second stage of the game and how they change with the financial structure chosen in the first stage of the game, with the level of uncertainty and with common and firm specific parameters.

The default probability of firm i is given by (for firm j computations would be similar):

$$\Pr\left(R^i(q_i,q_j,D_i,\gamma,\alpha_i) < D_i\right) = \Pr\left(z_i < \widehat{z}_i\right) = \int_{-\overline{z}}^{\widehat{z}_i(q_i,q_j,D_i,\gamma,\alpha_i)} f(z_i)dz_i = F(\widehat{z}_i(q_i,q_j,D_i,\gamma,\alpha_i))$$

where $F(z_i)$ is the cumulative density function. Thus, to compute the equilibrium default probability one needs to know the equilibrium critical state of nature, $\widehat{z}_i$. To obtain $\widehat{z}_i^*$ we just

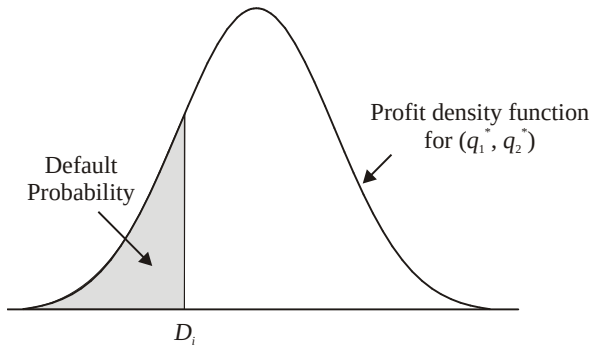

Figure 4: Equilibrium default probability for firm i considering the debt levels, D_i and D_j, chosen in the first stage.

need to substitute the Nash equilibrium quantities in $\widehat{z}_i(q_i, q_j, D_i, \gamma, \alpha_i)$:

$$\widehat{z}_i^*(D_i, D_j, \gamma, \alpha_i, \alpha_j, \overline{z}) = \widehat{z}_i(q_i^*(D_i, D_j, \gamma, \alpha_i, \alpha_j, \overline{z}), q_j^*(D_i, D_j, \gamma, \alpha_i, \alpha_j, \overline{z}), D_i, \gamma, \alpha_i) \tag{4}$$

Consequently, the equilibrium default probability is given by:

$$\theta^*(D_i, D_j, \gamma, \alpha_i, \alpha_j, \overline{z}) = \Pr(z_i < \widehat{z}_i^*) = \int_{-\overline{z}}^{\widehat{z}_i^*(D_i, D_j, \gamma, \alpha_i, \alpha_j, \overline{z})} f(z_i) dz_i = F\left(\widehat{z}_i^*(D_i, D_j, \gamma, \alpha_i, \alpha_j, \overline{z})\right)$$

Note that since $F(z_i)$ is increasing, the default probability is increasing with the equilibrium critical state of nature. Let us now analyze how this probability changes with D_i and D_j:

Proposition 2 *If $R^i_{iz_i} > 0$, an increase in firm i's debt, D_i, causes an increase in the equilibrium default probability of firm i, θ_i^*, if and only if $R^i_i(\widehat{z}_i)V^j_{jj}V^i_{iD_i} + V^i_{ii}V^j_{jj} - V^i_{ij}V^j_{ji} > R^i_j(\widehat{z}_i)V^j_{ji}V^i_{iD_i}$. Moreover, an increase in D_j causes an increase in θ_i^* if and only if $R^i_j(\widehat{z}_i)V^i_{ii} > R^i_i(\widehat{z}_i)V^i_{ij}$.*

The previous result indicates that the effect of changes in the debt level of a firm on the equilibrium bankruptcy probabilities is ambiguous. The intuition is that an increase in D_i has opposite effects on the two firms equilibrium quantities as q_i^* increases but q_j^* decreases, which in turn have opposite effects on the equilibrium bankruptcy probability. However, the sign of $\frac{\partial \theta_i^*}{\partial D_i}$ is very likely to be positive as a debt increase has a positive direct effect on the bankruptcy probability and the impact of D_i on the own firm's quantity is expected to have a larger magnitude than the impact of D_i on the rival's quantity. Thus, under standard assumptions, when a firm increases its debt, its default probability increases.

The sign of $\frac{\partial \theta_i^*}{\partial D_j}$ depends a lot on the marginal profits in the critical state of the world (which depends on the level of uncertainty and the sensitivity of marginal profits to the random

variable). In particular, for small levels of uncertainty, $R_i^i(\widehat{z}_i)$ is close to zero, thus it is very likely that $R_j^i(\widehat{z}_i)V_{ii}^i > R_i^i(\widehat{z}_i)V_{ij}^i$, in which case $\frac{\partial\theta_i^*}{\partial D_j}$ is positive. On the other hand, for large levels of uncertainty, $\left|R_i^i(\widehat{z}_i)\right|$ might be large enough to imply that $R_i^i(\widehat{z}_i)V_{ij}^i > R_j^i(\widehat{z}_i)V_{ii}^i$ and thus $\frac{\partial\theta_i^*}{\partial D_j}$ may be negative.

The intuition for this result is as follows: when D_j increases, firm j becomes more aggressive in the output market (produces more) whereas firm i becomes more conservative (produces less). The fact that j increases its quantity implies a lower profit for firm i in every state of nature, thus increasing the probability of default of firm i. Firm i partially compensates this by producing less, however the total effect is likely to be an increase in firm i default probability.

One can also analyze the impact of changes in the level of uncertainty (measured by $\overline{z}$) and the impact of changes in parameters γ and α_i on the equilibrium default probabilities.

Proposition 3 *If $R_{iz_i}^i > 0$ and firms are symmetric, for fixed debt levels, an increase in the level of uncertainty, $\overline{z}$, causes an increase in the equilibrium default probability of firm i, θ_i^*.*

This means that, for fixed debt levels, if there is an increase in the level of uncertainty, the default probability increases. The reason is that, in the second stage of the game, firms behave more aggressively when uncertainty is higher, i.e., equilibrium quantities are higher. This leads to an increase in the variability of the profit which consequently increases the bankruptcy probability.

Proposition 4 *If $R_{iz_i}^i > 0$, for fixed debt levels, an increase in the common parameter γ, causes an increase in the equilibrium default probability of firm i, θ_i^*,if and only if $R_i^i(\widehat{z}_i)\left(V_{jj}^jV_{i\gamma}^i - V_{ij}^iV_{j\gamma}^j\right) + R_j^i(\widehat{z}_i)\left(V_{ii}^iV_{j\gamma}^j - V_{ji}^jV_{i\gamma}^i\right) - R_\gamma^i\left(V_{ii}^iV_{jj}^j - V_{ij}^iV_{ji}^j\right) > 0$. The impact of γ on θ_i^* is ambiguous if R_γ^i and $R_{i\gamma}^i$ have the same sign. If R_γ^i and $R_{i\gamma}^i$ have opposite signs the impact of γ on θ_i^* has the same sign as $R_{i\gamma}^i$.*

Intuitively, when we analyze the impact of γ on the equilibrium default probability we need to consider both the direct impact of γ on the critical state of nature, and the indirect effects through the changes in the equilibrium quantities. The sign of the direct effect is straightforward: if γ has a positive impact on profits, then this means that the firm will be able to repay its debt for worse states of the world, $\widehat{z}_i$ decreases, which leads to a decrease in the bankruptcy probability. However, since for most parameters the impact on the profit and the impact on the marginal profit have the same sign, the indirect effect is ambiguous, as the effect of γ on the equilibrium quantities is ambiguous. Thus, the total effect of increasing γ on the default probability is, in general, ambiguous.

Proposition 5 *If $R^i_{iz_i} > 0$, for fixed debt levels, an increase in firm i's parameter α_i causes an increase in the equilibrium default probability of firm i, θ^*_i, if and only if $R^i_i(\widehat{z}_i)V^j_{jj}V^i_{i\alpha_i} - R^i_j(\widehat{z}_i)V^j_{ji}V^i_{i\alpha_i} - R^i_{\alpha_i}\left(V^i_{ii}V^j_{jj} - V^i_{ij}V^j_{ji}\right) > 0$.*

Like before, in order to analyze the impact of changes in α_i on the firm's bankruptcy probability, we need to consider both the direct effect of α_i on θ^*_i and indirect effects through the equilibrium quantities. Since the indirect effect has an ambiguous sign, the impact of changing α_i on the firm's default probability is, in general, ambiguous. However, since α_i has opposite effects on q^*_i and q^*_j, it seems quite likely that the direct effect dominates as the two effects through the equilibrium quantities tend to cancel each other. If the direct effect dominates the indirect effects and parameter α_i influences positively the profit of firm i, $R^i_{\alpha_i} > 0$, then an increase in α_i leads to a decrease in the default probability θ^*_i.

4 Subgame perfect equilibrium

4.1 Equilibrium debt levels

In the first stage firms choose simultaneously their debt levels so as to maximize the value of the firm. The value of the firm $Y^i(q_i, q_j, D_i, \overline{z}, \gamma, \alpha_i)$, is equal to the sum of the equity value $V^i(q_i, q_j, D_i, \overline{z}, \gamma, \alpha_i)$ and debt value $W^i(q_i, q_j, D_i, \overline{z}, \gamma, \alpha_i)$, which is equal to the expected operating profit of the firm:

$$\begin{aligned}
Y^i(q_i, q_j, D_i, \overline{z}, \gamma, \alpha_i) &= V^i(q_i, q_j, D_i, \overline{z}, \gamma, \alpha_i) + W^i(q_i, q_j, D_i, \overline{z}, \gamma, \alpha_i) \\
&= \int_{\widehat{z}_i(q_i, q_j, D_i, \gamma, \alpha_i)}^{\overline{z}} (R^i(q_i, q_j, z_i, \gamma, \alpha_i) - D_i) f(z_i) dz_i + \\
&\quad \int_{-\overline{z}}^{\widehat{z}_i(q_i, q_j, D_i, \gamma, \alpha_i)} R^i(q_i, q_j, z_i, \gamma, \alpha_i) f(z_i) dz_i + (1 - F(\widehat{z}_i))\, D_i \\
&= \int_{-\overline{z}}^{\widehat{z}_i(q_i, q_j, D_i, \gamma, \alpha_i)} R^i(q_i, q_j, z_i, \gamma, \alpha_i) f(z_i) dz_i + \int_{\widehat{z}_i(q_i, q_j, D_i, \gamma, \alpha_i)}^{\overline{z}} R^i(q_i, q_j, z_i, \gamma, \alpha_i) f(z_i) dz_i \\
&= \int_{-\overline{z}}^{\overline{z}} R^i(q_i, q_j, z_i, \gamma, \alpha_i) f(z_i) dz_i
\end{aligned}$$

Note that the debt value $W^i(q_i, q_j, D_i, \overline{z}, \gamma, \alpha_i)$ is equal:

$$W^i(q_i, q_j, D_i, \overline{z}, \gamma, \alpha_i) = \int_{-\overline{z}}^{\widehat{z}_i(q_i, q_j, D_i, \gamma, \alpha_i)} R^i(q_i, q_j, z_i, \gamma, \alpha_i) f(z_i) dz_i + (1 - F(\widehat{z}_i))\, D_i$$

The first term is the value that creditors receive in the worst states of the world (where expected operating profit is not sufficient to meet their obligations). The second term is the amount received in the best states of the world, $z_i > \widehat{z}_i$.

Considering the second stage Nash equilibrium, firm i chooses D_i so as to maximize the total value of the firm.

$$\max_{D_i} \int_{-\overline{z}}^{\overline{z}} R^i(q_i^*\left(D_i, D_j, \cdot\right), q_j^*\left(D_i, D_j, \cdot\right), \cdot) f(z_i) dz_i$$

The first order condition, $Y^i_{D_i} = 0$, is:

$$\left[\int_{-\overline{z}}^{\overline{z}} R_i^i(q_i^*\left(D_i, D_j, \cdot\right), q_j^*\left(D_i, D_j, \cdot\right), \cdot) f(z_i) dz_i\right] \frac{\partial q_i^*}{\partial D_i} + \left[\int_{-\overline{z}}^{\overline{z}} R_j^i(q_i^*\left(D_i, D_j, \cdot\right), q_j^*\left(D_i, D_j, \cdot\right), \cdot) f(z_i) dz_i\right] \frac{\partial q_j^*}{\partial D_i} = 0$$

which can also be written as:

$$\begin{aligned} Y^i_{D_i} \quad = \quad & \left[\int_{-\overline{z}}^{\widehat{z}_i} R_i^i(q_i^*\left(D_i, D_j, \cdot\right), q_j^*\left(D_i, D_j, \cdot\right), \cdot) f(z_i) dz_i\right] \frac{\partial q_i^*}{\partial D_i} \\ & + \left[\int_{\widehat{z}_i}^{\overline{z}} R_i^i(q_i^*\left(D_i, D_j, \cdot\right), q_j^*\left(D_i, D_j, \cdot\right), \cdot) f(z_i) dz_i\right] \frac{\partial q_i^*}{\partial D_i} \\ & + \left[\int_{-\overline{z}}^{\overline{z}} R_j^i(q_i^*\left(D_i, D_j, \cdot\right), q_j^*\left(D_i, D_j, \cdot\right), \cdot) f(z_i) dz_i\right] \frac{\partial q_j^*}{\partial D_i} = 0 \end{aligned}$$

By the first order condition of the second stage game, the second term is equal to zero. The first term captures the impact of the second stage induced change in q_i on the firm's debt value. Assuming $R^i_{iz_i} > 0$, $R^i_i(z)$ is increasing and we already know that $R^i_i(\widehat{z}) < 0$, hence $R^i_i(z) < 0$ for all $z < \widehat{z}$, which implies that the first term is negative (since $\frac{\partial q_i^*}{\partial D_i} > 0$). A higher D_i induces firm i to choose higher quantity levels in the second stage of the game, which hurts debtholders. The third term is the strategic effect of debt. When firm i increases its debt that induces firm j to reduce its output in the second stage game, $\frac{\partial q_j^*}{\partial D_i} < 0$. The reduction in q_j^* benefits firm i as $R^i_j < 0$. Thus, the strategic effect is positive.

To summarize the subgame perfect Nash equilibrium (SPNE) debt choices are the solution

of the system:

$$\left\{\begin{array}{l} Y^i_{D_i}=0 \\ Y^j_{D_j}=0 \end{array}\right. \Leftrightarrow \left\{\begin{array}{l} \left[\int\limits_{-\overline{z}}^{\widehat{z}_i} R^i_i(q^*_i,q^*_j,\cdot)f(z_i)dz_i\right]\frac{\partial q^*_i}{\partial D_i}+\left[\int\limits_{-\overline{z}}^{\overline{z}} R^i_j(q^*_i,q^*_j,\cdot)f(z_i)dz_i\right]\frac{\partial q^*_j}{\partial D_i}=0 \\ \left[\int\limits_{-\overline{z}}^{\widehat{z}_j} R^j_j(q^*_i,q^*_j,\cdot)f(z_j)dz_j\right]\frac{\partial q^*_j}{\partial D_j}+\left[\int\limits_{-\overline{z}}^{\overline{z}} R^j_i(q^*_i,q^*_j,\cdot)f(z_j)dz_j\right]\frac{\partial q^*_i}{\partial D_j}=0 \end{array}\right. \tag{5}$$

In order to have a well behaved game, we assume that $Y^i_{D_iD_i}<0$ (that is the firm's value function is concave in D_i, which implies that the point that satisfies the first order condition is a maximum), that $Y^i_{D_iD_j}<0$ and $Y^i_{D_iD_i}Y^j_{D_jD_j}-Y^i_{D_iD_j}Y^j_{D_jD_i}>0$. Let $D_i^{**}(\overline{z},\gamma,\alpha_i,\alpha_j)$ and $D_j^{**}(\overline{z},\gamma,\alpha_i,\alpha_j)$ be the solution of this system.[10]

As Brander and Lewis (1986) showed, in the subgame perfect equilibrium, firms choose a positive level of debt.

Proposition 6 ***(Brander and Lewis, 1986)*** *If $R^i_{iz_i}>0$, the equilibrium debt levels, D_i^{**} and D_j^{**}, are strictly positive.*

Let us now analyze the impact of changes in the parameters $\overline{z}$, γ and α_i on the SPNE. We start by analyzing the impact of changes in the uncertainty level:

Lemma 6 *If $R^i_{iz_i}>0$ and firms are symmetric, an increase in the level of uncertainty, $\overline{z}$, causes a change in firm i equilibrium debt level, D_i^{**}, with the same sign as $Y^i_{D_i\overline{z}}$. Thus D_i^{**} increases if and only if the firm's marginal value (with respect to its debt) is increasing with $\overline{z}$. The sign of $Y^i_{D_i\overline{z}}$ is ambiguous.*

It should be highlighted that, although in our general framework one cannot say whether the equilibrium debt levels are decreasing or increasing with the uncertainty level, in the linear demand case, with constant marginal costs, and z uniformly distributed, it has been shown that the equilibrium debt levels are decreasing with the uncertainty level (Frank and Le Pape, 2008; Haan and Toolsema, 2008). Intuitively, when the uncertainty level increases, for given debt levels, firms tend to be more aggressive in the output market, as expected demand conditional on $z_i>\widehat{z}_i$ is higher. Considering this, firms can get the same strategic effect with a lower level of debt. Therefore firms act in a more conservative manner in the debt market when uncertainty increases.

Let us now study the impact of changes in the common parameter, γ, on the SPNE.

[10] We use two stars (**) to denote the subgame perfect equilibrium variables' levels so as to distinguish from the notation used for the second stage Nash equilibrium.

Lemma 7 *If $R^i_{iz_i} > 0$ and firms are symmetric, an increase in the common parameter γ, causes a change in the equilibrium debt level, D_i^{**}, with the same sign as $Y^i_{D_i\gamma}$. Thus D_i^{**} increases if and only if the firm's marginal value of debt increases with γ. The sign of $Y^i_{D_i\gamma}$ is ambiguous.*

For many common parameters, such as the dimension of the market, the impact of the parameter on profits and on marginal profits are likely to have the same sign. Thus the parameter has an ambiguous influence on the second period market equilibrium, which in turn implies that the impact on the equilibrium debt levels is also ambiguous. However it should be noted that the impact on the equilibrium debt levels is also influenced by the way the parameter affects the marginal profits as well as the way it influences the marginal effect of the rival. An increase in a parameter with a positive impact on the marginal profits (like the dimension of the market) is quite likely to lead to higher equilibrium debt levels due to the direct impact of the parameter on the marginal profits of the firm.

Lemma 8 *If $R^i_{iz_i} > 0$, an increase in firm i's parameter α_i causes a change in the firm i's equilibrium debt level, D_i^{**}, with the same sign as $Y^i_{D_i\alpha_i}$ and a change in D_j^{**} with the opposite sign of $Y^i_{D_i\alpha_i}$. The sign of $Y^i_{D_i\alpha_i}$ is ambiguous.*

One important feature of the impact of changes in firm i's specific parameter, α_i, is that the impact on the equilibrium debt level of the firm has always the opposite sign of the impact on the equilibrium debt level of the rival firm. In the most likely case, where parameter α_i affects in the same direction the profit and the marginal profit of the firm, the impact of changes of α_i on the second period market equilibrium quantities is ambiguous, which also leads to an ambiguous impact of the parameter on the equilibrium debt levels. However the way the parameter affects the marginal profits is quite important to determine the effect on D_i^{**}. An increase in a parameter with a negative impact on the marginal profits (like the marginal cost of the firm) is quite likely to lead to a lower equilibrium debt level by the firm and to an higher equilibrium debt level by the rival. Thus, it seems likely that a less efficient firm (higher marginal cost) to be more conservative in the debt market (having a smaller equilibrium debt level).

4.2 SPNE default probabilities

Considering the SPNE, the equilibrium critical state of nature, $\widehat{z}_i^{**}$, can be obtained by substituting $D_i^{**}(\overline{z}, \gamma, \alpha_i, \alpha_j)$ and $D_j^{**}(\overline{z}, \gamma, \alpha_i, \alpha_j)$ and the corresponding SPNE quantities in $\widehat{z}_i(q_i, q_j, D_i, \gamma, \alpha_i)$

$$\widehat{z}_i^{**}(D_i, D_j, \gamma, \alpha_i, \alpha_j, \overline{z}) = \widehat{z}_i(q_i^{**}(D_i^{**}, D_j^{**}, \gamma, \alpha_i, \alpha_j, \overline{z}), q_j^{**}(D_i^{**}, D_j^{**}, \gamma, \alpha_i, \alpha_j, \overline{z}), D_i^{**}, \gamma, \alpha_i) \quad (6)$$

Consequently, the equilibrium default probability is given by:

$$\theta^{**}(D_i, D_j, \gamma, \alpha_i, \alpha_j, \overline{z}) = \Pr(z_i < \widehat{z}_i^{**}) = \int_{-\overline{z}}^{\widehat{z}_i^{**}(D_i, D_j, \gamma, \alpha_i, \alpha_j, \overline{z})} f(z_i) dz_i = F\left(\widehat{z}_i^{**}(D_i^{**}, D_j^{**}, \gamma, \alpha_i, \alpha_j, \overline{z})\right)$$

Let us analyze the impact of changes in the level of uncertainty $\overline{z}$ and the impact of changes in the parameters γ and α_i on the subgame perfect Nash equilibrium default probabilities.

Proposition 7 *If $R^i_{iz_i} > 0$ and firms are symmetric, an increase in the level of uncertainty, $\overline{z}$, has an ambiguous effect on the equilibrium default probability of firm i, θ_i^{**}.*

The impact of the uncertainty level on the bankruptcy probability can be decomposed on the direct impact of the uncertainty level on the second period market equilibrium and the impact on the equilibrium debt levels, which in turn influence the second period equilibrium and the default probabilities. By proposition 5 the first effect is positive whereas by lemma 6 the second effect is ambiguous, which explains the previous result.

It is interesting to notice that if $\frac{\partial D_i^{**}}{\partial \overline{z}} < 0$, the impact of $\overline{z}$ on the default probability may be negative.[11] The fact that there is larger uncertainty leads firms to behave in a more aggressive manner in the output market for fixed debt levels. This effect tends to increase the default probability. However, the greater uncertainty may lead firms to be more conservative in the debt market, thus issuing less debt. A lower debt, lowers the default probability directly and indirectly, through its influence on the second period equilibrium quantities. As a consequence we may obtain a counterintuitive result where more uncertainty leads to lower equilibrium default probabilities. This result is explained by the fact that, firms behave less aggressively in the debt market when uncertainty is higher, which leads to lower equilibrium bankruptcy probabilities.

Similarly, in our general framework we cannot determine the sign of the impact of γ and α_i on the equilibrium default probability.

Proposition 8 *If $R^i_{iz_i} > 0$, an increase in γ has an ambiguous effect on the equilibrium default probability of firm i, θ_i^*. Similarly, an increase in α_i has an ambiguous effect on the equilibrium default probability of firm i, θ_i^*.*

Although we are unable to determine the sign of the effects of changes in γ and α_i on the equilibrium bankruptcy probabilities, we would like to emphasize the possibility of having counterintuitive results. For instance, a firm with higher marginal costs, for fixed debt an

[11] In the linear demand case, with symmetric firms and constant marginal costs, it has been shown numerically by Frank and Le Pape (2008) and Haan and Toolsema (2008) that increasing uncertainty decreases the equilibrium debt levels.

quantities, has an higher probability of default, as profit decreases for all states of nature, which increases the critical state of nature and thus the default probability. However a less efficient firm may also have an incentive to issue less debt in equilibrium, which leads to a less aggressive behavior in the output market and, eventually to a lower bankruptcy probability.

5 Conclusion

This paper extends Brander and Lewis (1986) by analyzing the implications of financial structure decisions and output market decisions on the bankruptcy probability and also by studying the impact of changes in the parameters of the model on the equilibrium. This analysis is done both for the second stage equilibrium (considering the financial structure as given but taking into account the impact on the output market decisions) as well as for the subgame perfect equilibrium (i.e., taking into account the impact on the financial structure decisions as well as on the product market decisions).

By analyzing the second stage of the game, we conclude that a unilateral increase in a firm's debt leads to a more aggressive behavior of that firm in the output market, in contrast to the reaction of the other firm who reduces its production. In addition, under quite reasonable conditions, we show that increasing the level of demand uncertain has a positive effect on the equilibrium quantities; i.e., firms behave in a more aggressive way in the output market. Moreover, the impact of changing either common parameters or firm specific parameters on the equilibrium quantities, for fixed debt levels, is generally ambiguous and it depends on how the parameter affects both the profit and the marginal profit as well as on the level uncertainty. The parameters which affect both firms have the same effect on the quantities of both firms; in contrast, the parameters which directly affect only one of the firms always have the opposite effect on the equilibrium quantities of the two firms.

The analysis of the impact of changes in the model parameters on the second stage equilibrium quantities revealed the possibility of some non-standard results. For instance, it is possible that an increase in the marginal costs, for fixed debt levels, leads to an increase in the firm's equilibrium quantity, which is the opposite of what happens in standard oligopoly models where the limited liability effect is not considered. The intuition is that higher marginal costs imply that the set of states of the world where the firm is able to repay its debt becomes smaller, which leads the firm to behave in a more aggressive manner in order to maximize the expected equity value.

The analysis of the second stage equilibrium default probabilities also reveals some interesting conclusions. First, the effect of changes in the debt level of a firm on the equilibrium bankruptcy

probabilities is ambiguous. The intuition is that an increase in a firm's debt has opposite effects on the two firms equilibrium quantities, which in turn have opposite effects on the equilibrium bankruptcy probability. However, under quite reasonable conditions, an unilateral increase in the firm's debt causes an increase in its equilibrium default probability while the impact on the other firm probability of default depends on the level of uncertainty. In addition we show that increasing the level of demand uncertainty, for fixed debt levels, implies higher bankruptcy probabilities as firms become more aggressive in the output market. Finally the impact of changes in the common parameter as well as in the firm specific parameter on the default probabilities is generally ambiguous.

Considering our general framework, the sign of the impact of changes of the parameter values on the equilibrium debt values and on the equilibrium default probabilities cannot be determined, which is a somewhat disappointing result. However the direct impact of the parameter on the default probability and the indirect impact of the parameter on the default probabilities through the equilibrium debt levels and the equilibrium quantity levels may not all have the same sign. Consequently, one may obtain unexpected results, when the indirect effects outweigh the direct effect. For instance, a less efficient firm may have a lower probability of default than a more efficient one or default probabilities may be lower in markets with higher uncertainty. Intuitively, although higher marginal costs or higher uncertainty imply higher bankruptcy risk, for fixed debt and quantity levels, the firm may have an incentive to decrease its debt level, which leads to less aggressive behavior in the output market and a lower default probability.

In order to have a more complete analysis of the equilibrium bankruptcy probabilities it would be very interesting to extend the current model so as to incorporate bankruptcy costs as well as the impact of taxes on the analysis. We believe these extensions would provide important insights for empirical work on bankruptcy risk.

References

[1] Balcaen, S. and Ooghe, H., 2006. 35 years of studies on business failure: an overview of the classic statistical methodologies and their related problems. *The British Accounting Review*, 38, pp.63-93.

[2] Brander, J.A. and Lewis, T.R., 1986. Oligopoly and Financial Structure: The Limited Liability Effect. *American Economic Review*, 76(5), pp.956-970.

[3] Campos, J., 2000. Responsabilidad limitada, estructura financeira y comportamiento de las empresas españolas.*Investigaciones eonómicas*, XXIV(3), pp.585-610.

[4] Chevalier, J.,1995a. Capital structure and product market competition: Empirical evidence from the supermarket industry. *American Economic Review*, 85, pp.415-435.

[5] Clayton, M.,2009. Debt, investment, and product market competition: A note on the limited liability effect. *Journal of Banking & Finance*, 33, pp.694-700.

[6] Erol, T.,2003. Capital structure and output pricing in a developing country. *Economics Letters*, 78, pp.109-115.

[7] Franck, B. and Le Pape, N., 2008. The commitment value of the debt: A reappraisal. *International Journal of Industrial Organization*, 26(2), pp.607-615.

[8] Guney Y., et al. 2011. The relationship between product market competition and capital structure in Chinese listed firms. *International Review of Financial Analysis* , 20, pp.41-51.

[9] Haan, M. a. and Toolsema, L. a., 2008. The strategic use of debt reconsidered. *International Journal of Industrial Organization*, 26(2), pp.616-624.

[10] Maksimovic, V. 1988. Capital Structure in repeated oligopolies. *RAND Journal of Economics*, 19(3).

[11] Riordan, M.H., 2003. How Do Capital Markets Influence Product Market Competition? *Review of Industrial Organization*, pp.179-191.

[12] Wanzenried, G., 2003. Capital structure decisions and output market competition under demand uncertainty. *International Journal of Industrial Organization*, 21(2), pp.171-200.

6 Appendix A Proofs omitted from the main text

Lemma 1

Proof. Applying the implicit function theorem to (1) we get:

$$\begin{aligned}
\frac{\partial \widehat{z}_i}{\partial D_i} &= \frac{1}{R^i_{z_i}(\widehat{z}_i)}; \\
\frac{\partial \widehat{z}_i}{\partial q_j} &= -\frac{R^i_j(\widehat{z}_i)}{R^i_{z_i}(\widehat{z}_i)}; \\
\frac{\partial \widehat{z}_i}{\partial q_i} &= -\frac{R^i_i(\widehat{z}_i)}{R^i_{z_i}(\widehat{z}_i)};
\end{aligned}$$

Since $R^i_{z_i} > 0$ and $R^i_j < 0$, $\frac{\partial \widehat{z}_i}{\partial D_i} > 0$ and $\frac{\partial \widehat{z}_i}{\partial q_j} > 0$. Moreover $\frac{\partial \widehat{z}_i}{\partial q_i}$ has the opposite sign of $R^i_i(\widehat{z}_i)$. ■

Lemma 2

Proof. Applying the implicit function theorem to (1) we get:

$$\begin{aligned} \frac{\partial \widehat{z}_i}{\partial \gamma} &= -\frac{R^i_\gamma(\widehat{z}_i)}{R^i_{z_i}(\widehat{z}_i)}; \\ \frac{\partial \widehat{z}_i}{\partial \alpha_i} &= -\frac{R^i_{\alpha_i}(\widehat{z}_i)}{R^i_{z_i}(\widehat{z}_i)}. \end{aligned}$$

Since $R^i_{z_i} > 0$, $\frac{\partial \widehat{z}_i}{\partial \gamma}$ and $\frac{\partial \widehat{z}_i}{\partial \alpha_i}$ have the opposite signs of $R^i_\gamma(\widehat{z}_i)$ and $R^i_{\alpha_i}(\widehat{z}_i)$, respectively. ■

Preposition 1

Proof. As mentioned above this result was proved by Brander and Lewis (1986). However, for completeness we present its proof. Using the implicit function theorem in (3), we have:

$$\begin{bmatrix} \frac{\partial q_i}{\partial D_i} & \frac{\partial q_i}{\partial D_j} \\ \frac{\partial q_j}{\partial D_i} & \frac{\partial q_j}{\partial Dj} \end{bmatrix} = -\begin{bmatrix} V^i_{ii} & V^i_{ij} \\ V^j_{ji} & V^j_{jj} \end{bmatrix}^{-1} \begin{bmatrix} V^i_{iD_i} & 0 \\ 0 & V^j_{jD_j} \end{bmatrix}$$

Note that, in order to simplify notation, we did not write in which points we are evaluating the derivatives. The evaluation point is always the point which meets, simultaneously, the first order condition and the definition of $\widehat{z}_i$. The previous condition is equivalent to:

$$\begin{bmatrix} \frac{\partial q_i}{\partial D_i} & \frac{\partial q_i}{\partial D_j} \\ \frac{\partial q_j}{\partial D_i} & \frac{\partial q_j}{\partial Dj} \end{bmatrix} = -\frac{1}{V^i_{ii}V^j_{jj} - V^i_{ij}V^j_{ji}} \begin{bmatrix} V^j_{jj}V^i_{iD_i} & -V^i_{ij}V^j_{jD_j} \\ -V^j_{ji}V^i_{iD_i} & V^i_{ii}V^j_{jD_j} \end{bmatrix}$$

Let us evaluate the signs of these derivatives, taking into account that $V^i_{ii} < 0$, $V^j_{jj} < 0$, $V^i_{ij} < 0$, $V^j_{ji} < 0$ and $V^i_{ii}V^j_{jj} - V^i_{ij}V^j_{ji} > 0$. Considering these assumptions, one can easily show that:

$$\text{sign}\left(\frac{\partial q_i}{\partial D_i}\right) = \text{sign}\left(-\frac{V^j_{jj}V^i_{iD_i}}{V^i_{ii}V^j_{jj} - V^i_{ij}V^j_{ji}}\right) = \text{sign}(V^i_{iD_i})$$

Looking at the V^i_i function, we see that D_i only appears in the lower integration limit, through its influence on $\widehat{z}_i$. Thus, by Leibniz rule:

$$\begin{aligned} V^i_{iD_i} &= -R^i_i(q_i, q_j, \widehat{z}_i, \gamma, \alpha_i) f(\widehat{z}_i) \frac{\partial \widehat{z}_i}{\partial D_i} \\ &= -\frac{R^i_i(\widehat{z}_i)}{R^i_{z_i}(\widehat{z}_i)} f(\widehat{z}_i) \end{aligned}$$

As mentioned above, since $R^i_{iz_i} > 0$, R^i_i is increasing in z_i. Thus the first order condition implies that $R^i_i(\widehat{z}_i) < 0$. Hence $V^i_{iD_i} > 0$ and consequently $\frac{\partial q_i}{\partial D_i} > 0$.

Similarly, the sign of $\frac{\partial q_i}{\partial D_j}$ is

$$\text{sign}\left(\frac{\partial q_i}{\partial D_j}\right) = \text{sign}\left(\frac{V^i_{ij}V^j_{jD_j}}{V^i_{ii}V^j_{jj} - V^i_{ij}V^j_{ji}}\right) = \text{sign}(-V^j_{jD_j})$$

Thus $\frac{\partial q_i}{\partial D_j} < 0$. ■

Lemma 3

Proof. Applying the implicit function theorem to the system of equations (3) that define the Nash equilibrium, we get:

$$\begin{bmatrix} \frac{\partial q^*_i}{\partial \overline{z}} \\ \frac{\partial q^*_j}{\partial \overline{z}} \end{bmatrix} = -\begin{bmatrix} V^i_{ii} & V^i_{ij} \\ V^j_{ji} & V^j_{jj} \end{bmatrix}^{-1} \begin{bmatrix} V^i_{i\overline{z}} \\ V^j_{j\overline{z}} \end{bmatrix}$$

which is equivalent to:

$$\begin{bmatrix} \frac{\partial q^*_i}{\partial \overline{z}} \\ \frac{\partial q^*_j}{\partial \overline{z}} \end{bmatrix} = -\frac{1}{V^i_{ii}V^j_{jj} - V^i_{ij}V^j_{ji}} \begin{bmatrix} V^j_{jj}V^i_{i\overline{z}} - V^i_{ij}V^j_{j\overline{z}} \\ -V^j_{ji}V^i_{i\overline{z}} + V^i_{ii}V^j_{j\overline{z}} \end{bmatrix}$$

Thus the sign of $\frac{\partial q^*_i}{\partial \overline{z}}$ is:

$$\text{sign}\left(\frac{\partial q^*_i}{\partial \overline{z}}\right) = \text{sign}\left(-\frac{V^j_{jj}V^i_{i\overline{z}} - V^i_{ij}V^j_{j\overline{z}}}{V^i_{ii}V^j_{jj} - V^i_{ij}V^j_{ji}}\right)$$

We already assumed that $V^i_{ii}V^j_{jj} - V^i_{ij}V^j_{ji} > 0$. Thus $\frac{\partial q^*_i}{\partial \overline{z}} > 0$ if and only if $V^j_{jj}V^i_{i\overline{z}} - V^i_{ij}V^j_{j\overline{z}} < 0$, which shows the first part of the result. In addition, if we assume that $V^j_{jj} < V^i_{ij}$ and consider a symmetric game (which implies $V^i_{i\overline{z}} = V^j_{j\overline{z}}$), the sign of $\frac{\partial q^*_i}{\partial \overline{z}}$ will be equal to the sign of $V^i_{i\overline{z}}$. Looking at the V^i_i function, we see that $\overline{z}$ only appears in the upper integration limit. Thus, by Leibniz rule:

$$V^i_{i\overline{z}} = R^i_i(q_i, q_j, \overline{z}, \gamma, \alpha_i)f(\overline{z})$$

Since $R^i_{iz_i} > 0$, marginal profit (R^i_i) is positive at $\overline{z}$. Hence $V^i_{i\overline{z}}$ is positive and consequently $\frac{\partial q_i}{\partial \overline{z}} > 0$. ■

Lemma 4

Proof. Once again, if we apply the implicit function theorem to (3), we get

$$\begin{bmatrix} \frac{\partial q^*_i}{\partial \gamma} \\ \frac{\partial q^*_j}{\partial \gamma} \end{bmatrix} = -\begin{bmatrix} V^i_{ii} & V^i_{ij} \\ V^j_{ji} & V^j_{jj} \end{bmatrix}^{-1} \begin{bmatrix} V^i_{i\gamma} \\ V^j_{j\gamma} \end{bmatrix}$$

which is equivalent to:

$$\begin{bmatrix} \frac{\partial q_i^*}{\partial \gamma} \\ \frac{\partial q_j^*}{\partial \gamma} \end{bmatrix} = -\frac{1}{V_{ii}^i V_{jj}^j - V_{ij}^i V_{ji}^j} \begin{bmatrix} V_{jj}^j V_{i\gamma}^i - V_{ij}^i V_{j\gamma}^j \\ -V_{ji}^j V_{i\gamma}^i + V_{ii}^i V_{j\gamma}^j \end{bmatrix}$$

Hence the sign of $\frac{\partial q_i^*}{\partial \gamma}$ is:

$$\text{sign}\left(\frac{\partial q_i^*}{\partial \gamma}\right) = \text{sign}\left(-\frac{V_{jj}^j V_{i\gamma}^i - V_{ij}^i V_{j\gamma}^j}{V_{ii}^i V_{jj}^j - V_{ij}^i V_{ji}^j}\right)$$

Thus $\frac{\partial q_i^*}{\partial \gamma}$ has the opposite sign of $V_{jj}^j V_{i\gamma}^i - V_{ij}^i V_{j\gamma}^j$, which proves the first part of the result.

Considering now the case where firms are symmetric, $V_{i\gamma}^i = V_{j\gamma}^j$, the sign of $\frac{\partial q_i^*}{\partial \gamma}$ is the same than the sign of $V_{i\gamma}^i$. Noting that γ appears both in the integrand function and in the lower integration limit and applying Leibniz rule, we get:

$$\begin{aligned} V_{i\gamma}^i &= \int_{\widehat{z}_i}^{\overline{z}} R_{i\gamma}^i(q_i, q_j, z_i, \gamma, \alpha_i) f(z_i) dz_i - R_i^i(q_i, q_j, \widehat{z}_i, \gamma, \alpha_i) f(\widehat{z}_i) \frac{\partial \widehat{z}_i^*}{\partial \gamma} \\ V_{i\gamma}^i &= \int_{\widehat{z}_i}^{\overline{z}} R_{i\gamma}^i f(z_i) dz_i + R_i^i(\widehat{z}_i) \frac{R_\gamma^i(\widehat{z}_i)}{R_{z_i}^i(\widehat{z}_i)} f(\widehat{z}_i) \end{aligned}$$

As a consequence the sign of the impact depends both on the effect of γ on profit, R_γ^i, and the impact of γ on marginal profit $R_{i\gamma}^i$. If R_γ^i and $R_{i\gamma}^i$ have the same sign, the two terms will have opposite signs since $R_i^i(\widehat{z}_i) < 0$. Thus, if R_γ^i and $R_{i\gamma}^i$ have the same sign, $V_{i\gamma}^i$ has an ambiguous sign.

On the other hand if R_γ^i and $R_{i\gamma}^i$ have opposite signs, the sign of $V_{i\gamma}^i$ is the same as the sign of $R_{i\gamma}^i$, since the sign of $R_i^i(\widehat{z}_i) R_\gamma^i(\widehat{z}_i)$ is the same than the sign of $R_{i\gamma}^i$ as $R_i^i(\widehat{z}_i) < 0$. ■

Lemma 5

Proof. By the implicit function theorem we know that:

$$\begin{bmatrix} \frac{\partial q_i^*}{\partial \alpha_i} \\ \frac{\partial q_j^*}{\partial \alpha_i} \end{bmatrix} = -\begin{bmatrix} V_{ii}^i & V_{ij}^i \\ V_{ji}^j & V_{jj}^j \end{bmatrix}^{-1} \begin{bmatrix} V_{i\alpha_i}^i \\ 0 \end{bmatrix}$$

Which is equivalent to:

$$\begin{bmatrix} \frac{\partial q_i^*}{\partial \alpha_i} \\ \frac{\partial q_j^*}{\partial \alpha_i} \end{bmatrix} = -\frac{1}{V_{ii}^i V_{jj}^j - V_{ij}^i V_{ji}^j} \begin{bmatrix} V_{jj}^j V_{i\alpha_i}^i \\ -V_{ji}^j V_{i\alpha_i}^i \end{bmatrix}$$

Hence the sign of $\frac{\partial q_i^*}{\partial \alpha_i}$ is:

$$\text{sign}\left(\frac{\partial q_i^*}{\partial \alpha_i}\right) = \text{sign}\left(-\frac{V_{jj}^j V_{i\alpha_i}^i}{V_{ii}^i V_{jj}^j - V_{ij}^i V_{ji}^j}\right) = \text{sign}(V_{i\alpha_i}^i)$$

while the sign of $\frac{\partial q_j^*}{\partial \alpha_i}$ is:

$$\text{sign}\left(\frac{\partial q_j^*}{\partial \alpha_i}\right) = \text{sign}\left(\frac{V_{ji}^j V_{i\alpha_i}^i}{V_{ii}^i V_{jj}^j - V_{ij}^i V_{ji}^j}\right) = \text{sign}(-V_{i\alpha_i}^i)$$

Noting that α_i appears both in the integrand function and in the lower integration limit of V_i^i and applying Leibniz rule, we get:

$$\begin{aligned} V_{i\alpha_i}^i &= \int_{\widehat{z}_i}^{\overline{z}} R_{i\alpha_i}^i(q_i, q_j, z_i, \gamma, \alpha_i) f(z_i) dz_i - R_i^i(q_i, q_j, \widehat{z}_i, \gamma, \alpha_i) f(\widehat{z}_i) \frac{\partial \widehat{z}_i^*}{\partial \alpha_i} \\ V_{i\alpha_i}^i &= \int_{\widehat{z}_i}^{\overline{z}} R_{i\alpha_i}^i f(z_i) dz_i + R_i^i(\widehat{z}_i) \frac{R_{\alpha_i}^i}{R_{z_i}^i(\widehat{z}_i)} f(\widehat{z}_i) \end{aligned}$$

As a consequence the sign of the impact depends both on the effect of α_i on profit, $R_{\alpha_i}^i$, and the impact of α_i on marginal profit $R_{i\alpha_i}^i$. If $R_{\alpha_i}^i$ and $R_{i\alpha_i}^i$ have the same sign, the total effect of α_i on V_i^i will be ambiguous as $R_i^i(\widehat{z}_i) < 0$. On the other hand if $R_{\alpha_i}^i$ and $R_{i\alpha_i}^i$ have opposite signs, the sign of $V_{i\alpha_i}^i$ is the same as the sign of $R_{i\alpha_i}^i$, since the sign of $R_i^i(\widehat{z}_i) R_{\alpha_i}^i(\widehat{z}_i)$ is the same than the sign of $R_{i\alpha_i}^i$ as $R_i^i(\widehat{z}_i) < 0$. ■

Preposition 2

Proof. By Leibniz rule $\frac{\partial \theta_i^*}{\partial D_i}$ is given by:

$$\begin{aligned} \frac{\partial \theta_i^*}{\partial D_i} &= f(\widehat{z}_i^*) \frac{\partial \widehat{z}_i^*}{\partial D_i} \\ \frac{\partial \theta_i^*}{\partial D_j} &= f(\widehat{z}_i^*) \frac{\partial \widehat{z}_i^*}{\partial D_j} \end{aligned}$$

Since $f(\widehat{z}_i^*) > 0$ the sign of these derivatives are equal to the sign of $\frac{\partial \widehat{z}_i^*}{\partial D_i}$ and $\frac{\partial \widehat{z}_i^*}{\partial D_j}$, respectively. Applying the chain rule to (4) we get:

$$\frac{\partial \theta_i^*}{\partial D_i} = f(\widehat{z}_i^*) \left(\frac{\partial \widehat{z}_i}{\partial q_i^*} \frac{\partial q_i^*}{\partial D_i} + \frac{\partial \widehat{z}_i}{\partial q_j^*} \frac{\partial q_j^*}{\partial D_i} + \frac{\partial \widehat{z}_i}{\partial D_i} \right) \tag{7}$$

$$\frac{\partial \theta_i^*}{\partial D_j} = f(\widehat{z}_i^*) \left(\frac{\partial \widehat{z}_i}{\partial q_i^*} \frac{\partial q_i^*}{\partial D_j} + \frac{\partial \widehat{z}_i}{\partial q_j^*} \frac{\partial q_j^*}{\partial D_j} \right) \tag{8}$$

These expressions clearly indicate that the total impact of D_i on θ_i^* includes a direct effect, given by $f(\widehat{z}_i^*)\frac{\partial \widehat{z}_i}{\partial D_i}$, and indirect effects through the influence of D_i on the equilibrium quantities which in turn affect $\widehat{z}_i$. On the other hand, D_j does not influence $\widehat{z}_i^*$ directly but it has indirect impacts as it affects the equilibrium quantities. Considering the signs of the partial derivatives computed before, we can immediately see that the first term and the third term in (7) are positive while the second term is negative. Similarly, in (8) the first term is negative while the second term is positive. Thus we need to investigate which effect dominates.

$$\begin{aligned}
\frac{\partial \theta_i^*}{\partial D_i} &= f(\widehat{z}_i^*)\left(\frac{R_i^i(\widehat{z}_i)}{R_{z_i}^i(\widehat{z}_i)}\frac{V_{jj}^j V_{iD_i}^i}{V_{ii}^i V_{jj}^j - V_{ij}^i V_{ji}^j} - \frac{R_j^i(\widehat{z}_i)}{R_{z_i}^i(\widehat{z}_i)}\frac{V_{ji}^j V_{iD_i}^i}{V_{ii}^i V_{jj}^j - V_{ij}^i V_{ji}^j} + \frac{1}{R_{z_i}^i(\widehat{z}_i)}\right) \\
\frac{\partial \theta_i^*}{\partial D_j} &= f(\widehat{z}_i^*)\left(-\frac{R_i^i(\widehat{z}_i)}{R_{z_i}^i(\widehat{z}_i)}\frac{V_{ij}^i V_{jD_j}^j}{V_{ii}^i V_{jj}^j - V_{ij}^i V_{ji}^j} + \frac{R_j^i(\widehat{z}_i)}{R_{z_i}^i(\widehat{z}_i)}\frac{V_{ii}^i V_{jDj}^j}{V_{ii}^i V_{jj}^j - V_{ij}^i V_{ji}^j}\right)
\end{aligned}$$

The sign of $\frac{\partial \theta_i^*}{\partial D_i}$is positive if $R_i^i(\widehat{z}_i)V_{jj}^j V_{iD_i}^i + V_{ii}^i V_{jj}^j - V_{ij}^i V_{ji}^j > R_j^i(\widehat{z}_i)V_{ji}^j V_{iD_i}^i$. Since $V_{jj}^j < V_{ji}^j$ and $V_{ii}^i V_{jj}^j - V_{ij}^i V_{ji}^j > 0$, the previous condition is likely to be satisfied. A sufficient condition, for $\frac{\partial \theta_i^*}{\partial D_i}$ to be positive is $R_i^i(\widehat{z}_i)V_{jj}^j > R_j^i(\widehat{z}_i)V_{ji}^j$. If this condition holds, an increase in the debt of firm i increases the default probability of firm i.

On the other hand, the sign of $\frac{\partial \theta_i^*}{\partial D_j}$is positive if and only if $R_j^i(\widehat{z}_i)V_{ii}^i > R_i^i(\widehat{z}_i)V_{ij}^i$. ■

Preposition 3

Proof. The impact of changes in the level of uncertainty on the default probability is (applying the chain rule to (4)):

$$\frac{\partial \theta_i^*}{\partial \overline{z}} = f(\widehat{z}_i^*)\frac{\partial \widehat{z}_i^*}{\partial \overline{z}} = f(\widehat{z}_i^*)\left[\frac{\partial \widehat{z}_i}{\partial q_i^*}\frac{\partial q_i^*}{\partial \overline{z}} + \frac{\partial \widehat{z}_i}{\partial q_j^*}\frac{\partial q_j^*}{\partial \overline{z}}\right]$$

We have shown before that, if firms are symmetric, $\frac{\partial q_i^*}{\partial \overline{z}}$ and $\frac{\partial q_j^*}{\partial \overline{z}}$ are both positive and we also know that $\frac{\partial \widehat{z}_i}{\partial q_i^*} > 0$ and $\frac{\partial \widehat{z}_i}{\partial q_j^*} > 0$. Thus, if firms are symmetric $\frac{\partial \theta_i^*}{\partial \overline{z}}$ is positive. ■

Preposition 4

Proof. When parameter γ changes, the impact on the default probability is:

$$\frac{\partial \theta_i^*}{\partial \gamma} = f(\widehat{z}_i^*)\frac{\partial \widehat{z}_i^*}{\partial \gamma} = f(\widehat{z}_i^*)\left[\frac{\partial \widehat{z}_i}{\partial q_i^*}\frac{\partial q_i^*}{\partial \gamma} + \frac{\partial \widehat{z}_i}{\partial q_j^*}\frac{\partial q_j^*}{\partial \gamma} + \frac{\partial \widehat{z}_i}{\partial \gamma}\right]$$

These expression clearly indicates that the total impact of γ on θ_i^* includes a direct effect, given by $f(\widehat{z}_i^*)\frac{\partial \widehat{z}_i}{\partial \gamma}$, and indirect effects through the influence of γ on the equilibrium quantities which

in turn affect $\widehat{z}_i$. The previous expression can be written as follows:

$$\frac{\partial \theta_i^*}{\partial \gamma} = f(\widehat{z}_i^*)\left[\frac{R_i^i(\widehat{z}_i)}{R_{z_i}^i(\widehat{z}_i)}\frac{V_{jj}^j V_{i\gamma}^i - V_{ij}^i V_{j\gamma}^j}{V_{ii}^i V_{jj}^j - V_{ij}^i V_{ji}^j} + \frac{R_j^i(\widehat{z}_i)}{R_{z_i}^i(\widehat{z}_i)}\frac{V_{ii}^i V_{j\gamma}^j - V_{ji}^j V_{i\gamma}^i}{V_{ii}^i V_{jj}^j - V_{ij}^i V_{ji}^j} - \frac{R_\gamma^i}{R_{z_i}^i(\widehat{z}_i)}\right]$$

Since $R_{z_i}^i(\widehat{z}_i) > 0$ and $V_{ii}^i V_{jj}^j - V_{ij}^i V_{ji}^j > 0$ one concludes immediately that $\frac{\partial \theta_i^*}{\partial \gamma} > 0$ if and only if

$$R_i^i(\widehat{z}_i)\left(V_{jj}^j V_{i\gamma}^i - V_{ij}^i V_{j\gamma}^j\right) + R_j^i(\widehat{z}_i)\left(V_{ii}^i V_{j\gamma}^j - V_{ji}^j V_{i\gamma}^i\right) - R_\gamma^i\left(V_{ii}^i V_{jj}^j - V_{ij}^i V_{ji}^j\right) > 0.$$

The rest of the result is a direct consequence of Lemma 4 and he fact that the direct impact has the opposite sign of R_γ^i. ■

Preposition 5

Proof. The impact of changes in α_i is given by:

$$\frac{\partial \theta_i^*}{\partial \alpha_i} = f(\widehat{z}_i^*)\frac{\partial \widehat{z}_i^*}{\partial \alpha_i} = f(\widehat{z}_i^*)\left[\frac{\partial \widehat{z}_i}{\partial q_i^*}\frac{\partial q_i^*}{\partial \alpha_i} + \frac{\partial \widehat{z}_i}{\partial q_j^*}\frac{\partial q_j^*}{\partial \alpha_i} + \frac{\partial \widehat{z}_i}{\partial \alpha_i}\right]$$

The total impact of α_i on θ_i^* includes a direct effect, given by $f(\widehat{z}_i^*)\frac{\partial \widehat{z}_i}{\partial \alpha_i}$, and indirect effects through the influence of α_i on the equilibrium quantities ($q_i^*$and q_j^*) which in turn affect $\widehat{z}_i$. Substituting the results that were obtained previously:

$$\frac{\partial \theta_i^*}{\partial \alpha_i} = f(\widehat{z}_i^*)\left[\frac{R_i^i(\widehat{z}_i)}{R_{z_i}^i(\widehat{z}_i)}\frac{V_{jj}^j V_{i\alpha_i}^i}{V_{ii}^i V_{jj}^j - V_{ij}^i V_{ji}^j} - \frac{R_j^i(\widehat{z}_i)}{R_{z_i}^i(\widehat{z}_i)}\frac{V_{ji}^j V_{i\alpha_i}^i}{V_{ii}^i V_{jj}^j - V_{ij}^i V_{ji}^j} - \frac{R_{\alpha_i}^i}{R_{z_i}^i(\widehat{z}_i)}\right]$$

Since $R_{z_i}^i(\widehat{z}_i) > 0$ and $V_{ii}^i V_{jj}^j - V_{ij}^i V_{ji}^j > 0$ one concludes immediately that $\frac{\partial \theta_i^*}{\partial \alpha_i} > 0$ if and only if $R_i^i(\widehat{z}_i)V_{jj}^j V_{i\alpha_i}^i - R_j^i(\widehat{z}_i)V_{ji}^j V_{i\alpha_i}^i - R_{\alpha_i}^i\left(V_{ii}^i V_{jj}^j - V_{ij}^i V_{ji}^j\right) > 0$. ■

Preposition 6

Proof. Note that when $D_i = 0$, the critical state of nature is $\widehat{z}_i = -\overline{z}$ (since there are no debt obligations, equityholders are able to meet debt obligations for all states of nature). This implies that the first term in the first equation of (5) is equal to zero. Thus $Y_{D_i}^i > 0$ at $D_i = 0$, as the second term is positive. But this means that the firm gains by increasing D_i, thus the optimal level of debt is positive. ■

Lemma 6

Proof. Applying the implicit function theorem to equation (5) which defines the subgame

perfect Nash equilibrium, we get:

$$\begin{bmatrix} \frac{\partial D_i^{**}}{\partial \overline{z}} \\ \frac{\partial D_j^{**}}{\partial \overline{z}} \end{bmatrix} = - \begin{bmatrix} Y^i_{D_iD_i} & Y^i_{D_iD_j} \\ Y^j_{D_jD_i} & Y^j_{D_jD_j} \end{bmatrix}^{-1} \begin{bmatrix} Y^i_{D_i\overline{z}} \\ Y^j_{D_j\overline{z}} \end{bmatrix}$$

which is equivalent to:

$$\begin{bmatrix} \frac{\partial D_i^{**}}{\partial \overline{z}} \\ \frac{\partial D_j^{**}}{\partial \overline{z}} \end{bmatrix} = - \frac{1}{Y^i_{D_iD_i}Y^j_{D_jD_j} - Y^i_{D_iD_j}Y^j_{D_jD_i}} \begin{bmatrix} Y^j_{D_jD_j}Y^i_{D_i\overline{z}} - Y^i_{D_iD_j}Y^j_{D_j\overline{z}} \\ -Y^j_{D_jD_i}Y^i_{D_i\overline{z}} + Y^i_{D_iD_i}Y^j_{D_j\overline{z}} \end{bmatrix}$$

Let us evaluate the signs of these derivatives, taking into account that $Y^i_{D_iD_i} < 0$, $Y^j_{D_jD_j} < 0$, $Y^i_{D_iD_j} < 0$ and $Y^i_{D_iD_i}Y^j_{D_jD_j} - Y^i_{D_iD_j}Y^j_{D_jD_i} > 0$. Assuming that $\left|Y^j_{D_jD_j}\right| > \left|Y^i_{D_iD_j}\right|$ and considering that firms are symmetric, $Y^i_{D_i\overline{z}} = Y^j_{D_j\overline{z}}$, the sign of $\frac{\partial D_i^{**}}{\partial \overline{z}}$ is:

$$\text{sign}\left(\frac{\partial D_i^{**}}{\partial \overline{z}}\right) = \text{sign}\left(-\frac{Y^j_{D_jD_j}Y^i_{D_i\overline{z}} - Y^i_{D_iD_j}Y^j_{D_j\overline{z}}}{Y^i_{D_iD_i}Y^j_{D_jD_j} - Y^i_{D_iD_j}Y^j_{D_jD_i}}\right) = \text{sign}(Y^i_{D_i\overline{z}})$$

Applying Leibniz rule, $Y^i_{D_i\overline{z}}$ is given by (we need to consider all the impacts of $\overline{z}$ on Y_{D_i} except the ones through D_i and D_j):

$$\left[\int_{-\overline{z}}^{\overline{z}} R^i_{ii}(q_i^*, q_j^*, \cdot)\frac{\partial q_i^*}{\partial \overline{z}} f(z_i)dz_i + \int_{-\overline{z}}^{\overline{z}} R^i_{ij}(q_i^*, q_j^*, \cdot)\frac{\partial q_j^*}{\partial \overline{z}} f(z_i)dz_i + R^i_i(\overline{z})f(\overline{z}) - R^i_i(-\overline{z})f(-\overline{z})\right]\frac{\partial q_i^*}{\partial D_i} +$$
$$\left[\int_{-\overline{z}}^{\overline{z}} R^i_{ji}(q_i^*, q_j^*, \cdot)\frac{\partial q_i^*}{\partial \overline{z}} f(z_i)dz_i + \int_{-\overline{z}}^{\overline{z}} R^i_{jj}(q_i^*, q_j^*, \cdot)\frac{\partial q_j^*}{\partial \overline{z}} f(z_i)dz_i + R^i_j(\overline{z})f(\overline{z}) - R^i_j(-\overline{z})f(-\overline{z})\right]\frac{\partial q_j^*}{\partial D_i} +$$
$$\left[\int_{-\overline{z}}^{\overline{z}} R^i_i(q_i^*, q_j^*, \cdot)f(z_i)dz_i\right]\frac{\partial^2 q_i^*}{\partial D_i \partial \overline{z}} + \left[\int_{-\overline{z}}^{\overline{z}} R^i_j(q_i^*, q_j^*, \cdot)f(z_i)dz_i\right]\frac{\partial^2 q_j^*}{\partial D_i \partial \overline{z}}$$

Consider the expression inside the first parentheses. Since $R^i_{ii} < 0$ and $\frac{\partial q_i^*}{\partial \overline{z}} > 0$, the first term is negative. Similarly, since $R^i_{ij} < 0$ and $\frac{\partial q_j^*}{\partial \overline{z}} > 0$, the second term is also negative. However, the third term, $R^i_i(\overline{z})f(\overline{z}) - R^i_i(-\overline{z})f(-\overline{z})$, is positive. Thus the sign of the expression inside the first parentheses is ambiguous (note that this expression is multiplied by $\frac{\partial q_i^*}{\partial D_i} > 0$). Similarly, the sign of the expression inside the second parentheses is also ambiguous as the two first terms are negative whereas the last term is positive (note that this expression is multiplied by $\frac{\partial q_j^*}{\partial D_i} < 0$). Finally, the sign of the last two terms in the expression is also not clear as the terms inside parentheses are negative but the sign of $\frac{\partial^2 q_i^*}{\partial D_i \partial \overline{z}}$ and $\frac{\partial^2 q_j^*}{\partial D_i \partial \overline{z}}$ are not known. Therefore, without further restrictions, the impact of $\overline{z}$ on the equilibrium debt levels is ambiguous. ■

Lemma 7

Proof. Applying the implicit function theorem to equation (5) we get:

$$\begin{bmatrix} \frac{\partial D_i^{**}}{\partial \gamma} \\ \frac{\partial D_j^{*}}{\partial \gamma} \end{bmatrix} = - \begin{bmatrix} Y^i_{D_iD_i} & Y^i_{D_iD_j} \\ Y^j_{D_jD_i} & Y^j_{D_jD_j} \end{bmatrix}^{-1} \begin{bmatrix} Y^i_{D_i\gamma} \\ Y^j_{D_j\gamma} \end{bmatrix}$$

which is equivalent to:

$$\begin{bmatrix} \frac{\partial D_i^{**}}{\partial \gamma} \\ \frac{\partial D_j^{*}}{\partial \gamma} \end{bmatrix} = - \frac{1}{Y^i_{D_iD_i}Y^j_{D_jD_j} - Y^i_{D_iD_j}Y^j_{D_jD_i}} \begin{bmatrix} Y^j_{D_jD_j}Y^i_{D_i\gamma} - Y^i_{D_iD_j}Y^j_{D_j\gamma} \\ -Y^j_{D_jD_i}Y^i_{D_i\gamma} + Y^i_{D_iD_i}Y^j_{D_j\gamma} \end{bmatrix}$$

Taking into account that $Y^i_{D_iD_i} < 0$, $Y^j_{D_jD_j} < 0$, $Y^i_{D_iD_j} < 0$, $Y^i_{D_iD_i}Y^j_{D_jD_j} - Y^i_{D_iD_j}Y^j_{D_jD_i} > 0$, $\left|Y^j_{D_jD_j}\right| > \left|Y^i_{D_iD_j}\right|$ and considering that firms are symmetric, $Y^i_{D_i\gamma} = Y^j_{D_j\gamma}$, the sign of $\frac{\partial D_i^{**}}{\partial \gamma}$ is:

$$\text{sign}\left(\frac{\partial D_i^{**}}{\partial \gamma}\right) = \text{sign}\left(-\frac{Y^j_{D_jD_j}Y^i_{D_i\gamma} - Y^i_{D_iD_j}Y^j_{D_j\gamma}}{Y^i_{D_iD_i}Y^j_{D_jD_j} - Y^i_{D_iD_j}Y^j_{D_jD_i}}\right) = \text{sign}(Y^i_{D_i\gamma})$$

Where $Y^i_{D_i\gamma}$ is given by

$$\left[\int_{-\overline{z}}^{\overline{z}} R^i_{ii}(q_i^*, q_j^*, \cdot)\frac{\partial q_i^*}{\partial \gamma} f(z_i)dz_i + \int_{-\overline{z}}^{\overline{z}} R^i_{ij}(q_i^*, q_j^*, \cdot)\frac{\partial q_j^*}{\partial \gamma} f(z_i)dz_i\right]\frac{\partial q_i^*}{\partial D_i} +$$
$$\left[\int_{-\overline{z}}^{\overline{z}} R^i_{ji}(q_i^*, q_j^*, \cdot)\frac{\partial q_i^*}{\partial \gamma} f(z_i)dz_i + \int_{-\overline{z}}^{\overline{z}} R^i_{jj}(q_i^*, q_j^*, \cdot)\frac{\partial q_j^*}{\partial \gamma} f(z_i)dz_i\right]\frac{\partial q_j^*}{\partial D_i} +$$
$$\left[\int_{-\overline{z}}^{\overline{z}} R^i_{i}(q_i^*, q_j^*, \cdot) f(z_i)dz_i\right]\frac{\partial^2 q_i^*}{\partial D_i \partial \gamma} + \left[\int_{-\overline{z}}^{\overline{z}} R^i_{j}(q_i^*, q_j^*, \cdot) f(z_i)dz_i\right]\frac{\partial^2 q_j^*}{\partial D_i \partial \gamma} +$$
$$\int_{-\overline{z}}^{\overline{z}} R^i_{i\gamma}(q_i^*\left(D_i, D_j, \cdot\right), q_j^*\left(D_i, D_j, \cdot\right), \cdot) f(z_i)dz_i + \int_{-\overline{z}}^{\overline{z}} R^i_{j\gamma}(q_i^*\left(D_i, D_j, \cdot\right), q_j^*\left(D_i, D_j, \cdot\right), \cdot) f(z_i)dz_i$$

In the symmetric case $\frac{\partial q_i^*}{\partial \gamma} = \frac{\partial q_j^*}{\partial \gamma}$ and the sign of the expressions inside the first and the second parentheses have the opposite sign of $\frac{\partial q_i^*}{\partial \gamma}$ (note that the first expression is multiplied by $\frac{\partial q_i^*}{\partial D_i} > 0$ whereas the second expression is multiplied by $\frac{\partial q_j^*}{\partial D_i} < 0$, thus the first and second line have opposite signs). By lemma 4 we know that if γ affects profits and marginal profits in the same direction (R^i_γ and $R^i_{i\gamma}$ have the same sign) then $\frac{\partial q_i^*}{\partial \gamma}$ has an ambiguous sign. This implies that the sign of $Y^i_{D_i\gamma}$ is also ambiguous. In addition notice that the sign of $Y^i_{D_i\gamma}$ is also influenced by the sign of $R^i_{i\gamma}$ and the sign of $R^i_{j\gamma}$. If R^i_γ and $R^i_{i\gamma}$ have opposite sign, the sign of $\frac{\partial q_i^*}{\partial \gamma}$ is the same sign as $R^i_{i\gamma}$. Thus the sign of the expression inside the first parentheses has the opposite sign of $R^i_{i\gamma}$. However the sign of the second line and also the sign of the penultimate term is the same sign as $R^i_{i\gamma}$. Thus the sign of $Y^i_{D_i\gamma}$ is ambiguous. ■

Lemma 8

Proof. Applying the implicit function theorem to equation (5), we get:

$$\begin{bmatrix} \frac{\partial D_i^{**}}{\partial \alpha_i} \\ \frac{\partial D_j^{*}}{\partial \alpha_i} \end{bmatrix} = - \begin{bmatrix} Y^i_{D_iD_i} & Y^i_{D_iD_j} \\ Y^j_{D_jD_i} & Y^j_{D_jD_j} \end{bmatrix}^{-1} \begin{bmatrix} Y^i_{D_i\alpha_i} \\ 0 \end{bmatrix}$$

which is equivalent to:

$$\begin{bmatrix} \frac{\partial D_i^{**}}{\partial \alpha_i} \\ \frac{\partial D_j^{*}}{\partial \alpha_i} \end{bmatrix} = - \frac{1}{Y^i_{D_iD_i}Y^j_{D_jD_j} - Y^i_{D_iD_j}Y^j_{D_jD_i}} \begin{bmatrix} Y^j_{D_jD_j}Y^i_{D_i\alpha_i} \\ -Y^j_{D_jD_i}Y^i_{D_i\alpha_i} \end{bmatrix}$$

The signs of these derivatives, taking into account that $Y^j_{D_jD_j} < 0$ and $Y^i_{D_iD_i}Y^j_{D_jD_j} - Y^i_{D_iD_j}Y^j_{D_jD_i} > 0$ is given by:

$$\begin{aligned} \text{sign}\left(\frac{\partial D_i^{**}}{\partial \alpha_i}\right) &= \text{sign}\left(-\frac{Y^j_{D_jD_j}Y^i_{D_i\alpha_i}}{Y^i_{D_iD_i}Y^j_{D_jD_j} - Y^i_{D_iD_j}Y^j_{D_jD_i}}\right) = \text{sign}\left(Y^i_{D_i\alpha_i}\right) \\ \text{sign}\left(\frac{\partial D_j^{**}}{\partial \alpha_i}\right) &= \text{sign}\left(\frac{Y^j_{D_jD_i}Y^i_{D_i\alpha_i}}{Y^i_{D_iD_i}Y^j_{D_jD_j} - Y^i_{D_iD_j}Y^j_{D_jD_i}}\right) = \text{sign}\left(-Y^i_{D_i\alpha_i}\right) \end{aligned}$$

Where $Y^i_{D_i\alpha_i}$ is given by:

$$\begin{aligned} &\left[\int_{-\overline{z}}^{\overline{z}} R^i_{ii}(q_i^*, q_j^*, \cdot)\frac{\partial q_i^*}{\partial \alpha_i} f(z_i)dz_i + \int_{-\overline{z}}^{\overline{z}} R^i_{ij}(q_i^*, q_j^*, \cdot)\frac{\partial q_j^*}{\partial \alpha_i} f(z_i)dz_i\right]\frac{\partial q_i^*}{\partial D_i} + \\ &\left[\int_{-\overline{z}}^{\overline{z}} R^i_{ji}(q_i^*, q_j^*, \cdot)\frac{\partial q_i^*}{\partial \alpha_i} f(z_i)dz_i + \int_{-\overline{z}}^{\overline{z}} R^i_{jj}(q_i^*, q_j^*, \cdot)\frac{\partial q_j^*}{\partial \alpha_i} f(z_i)dz_i\right]\frac{\partial q_j^*}{\partial D_i} \\ &+ \left[\int_{-\overline{z}}^{\overline{z}} R^i_{i}(q_i^*, q_j^*, \cdot) f(z_i)dz_i\right]\frac{\partial^2 q_i^*}{\partial D_i \partial \alpha_i} + \left[\int_{-\overline{z}}^{\overline{z}} R^i_{j}(q_i^*, q_j^*, \cdot) f(z_i)dz_i\right]\frac{\partial^2 q_j^*}{\partial D_i \partial \alpha_i} \\ &\int_{-\overline{z}}^{\overline{z}} R^i_{i\alpha_i}(q_i^*\left(D_i, D_j, \cdot\right), q_j^*\left(D_i, D_j, \cdot\right), \cdot) f(z_i)dz_i + \int_{-\overline{z}}^{\overline{z}} R^i_{j\alpha_i}(q_i^*\left(D_i, D_j, \cdot\right), q_j^*\left(D_i, D_j, \cdot\right), \cdot) f(z_i)dz_i \end{aligned}$$

As proved in lemma 5, $\frac{\partial q_i^*}{\partial \alpha_i}$ has the same sign of $V^i_{i\alpha_i}$and $\frac{\partial q_j^*}{\partial \alpha_i}$ has the opposite sign of $V^i_{i\alpha_i}$. Moreover the sign of $V^i_{i\alpha_i}$ is ambiguous if $R^i_{\alpha_i}$ and $R^i_{i\alpha_i}$ have the same sign, otherwise $V^i_{i\alpha_i}$ has the same sign as $R^i_{i\alpha_i}$. When $R^i_{\alpha_i}$ and $R^i_{i\alpha_i}$ have the same sign, the sign of $Y^i_{D_i\alpha_i}$ is ambiguous as the effect of the parameter α_i on firm i and firm j equilibrium quantities is ambiguous (note that the first and second line have opposite signs). If $R^i_{\alpha_i}$ and $R^i_{i\alpha_i}$ have opposite sign, the sign of $\frac{\partial q_i^*}{\partial \alpha_i}$ is the same than the sign of $R^i_{i\alpha_i}$. The two terms of the expression inside the first

parentheses have opposite signs, but the sign of the expression is the opposite sign of $R^i_{i\alpha_i}$ as $\left|\frac{\partial q_i^*}{\partial \alpha_i}\right| > \left|\frac{\partial q_j^*}{\partial \alpha_i}\right|$. However the sign of the second line and also the sign of the penultimate term is the same sign as $R^i_{i\alpha_i}$. Thus the sign of $Y^i_{D_i\alpha_i}$ is ambiguous. ■

Preposition 7

Proof. The impact of changes in the level of uncertainty on the SPNE default probability is:

$$\frac{\partial \theta_i^{**}}{\partial \overline{z}} = f(\widehat{z}_i^{**})\frac{\partial \widehat{z}_i^{**}}{\partial \overline{z}}$$

where $\frac{\partial \widehat{z}_i^{**}}{\partial \overline{z}}$ is equivalent to (applying the chain rule to (6)):

$$\left(\frac{\partial q_i^{**}}{\partial D_i^{**}}\frac{\partial D_i^{**}}{\partial \overline{z}} + \frac{\partial q_i^{**}}{\partial D_j^{**}}\frac{\partial D_j^{**}}{\partial \overline{z}} + \frac{\partial q_i^{**}}{\partial \overline{z}}\right)\frac{\partial \widehat{z}_i}{\partial q_i^{**}} + \left(\frac{\partial q_j^{**}}{\partial D_i^{**}}\frac{\partial D_i^{**}}{\partial \overline{z}} + \frac{\partial q_j^{**}}{\partial D_j^{**}}\frac{\partial D_j^{**}}{\partial \overline{z}} + \frac{\partial q_j^{**}}{\partial \overline{z}}\right)\frac{\partial \widehat{z}_i}{\partial q_j^{**}} + \frac{\partial \widehat{z}_i}{\partial D_i^{**}}\frac{\partial D_i^{**}}{\partial \overline{z}}$$

The previous expression indicates that increasing the uncertainty has several effects on the default probability. On the one hand, increasing the uncertainty has a direct impact on the second period equilibrium quantities, which affects $\widehat{z}_i$:

$$\frac{\partial q_i^{**}}{\partial \overline{z}}\frac{\partial \widehat{z}_i}{\partial q_i^{**}} + \frac{\partial q_j^{**}}{\partial \overline{z}}\frac{\partial \widehat{z}_i}{\partial q_j^{**}}$$

By proposition 5 we know that this direct effect leads to an increase in the probability of default. On the other hand, an increase in the uncertainty level affects the equilibrium debt levels, which in turn affect the second period equilibrium quantities and the equilibrium critical state:

$$\left(\frac{\partial q_i^{**}}{\partial D_i^{**}}\frac{\partial D_i^{**}}{\partial \overline{z}} + \frac{\partial q_i^{**}}{\partial D_j^{**}}\frac{\partial D_j^{**}}{\partial \overline{z}}\right)\frac{\partial \widehat{z}_i}{\partial q_i^{**}} + \left(\frac{\partial q_j^{**}}{\partial D_i^{**}}\frac{\partial D_i^{**}}{\partial \overline{z}} + \frac{\partial q_j^{**}}{\partial D_j^{**}}\frac{\partial D_j^{**}}{\partial \overline{z}}\right)\frac{\partial \widehat{z}_i}{\partial q_j^{**}} + \frac{\partial \widehat{z}_i}{\partial D_i^{**}}\frac{\partial D_i^{**}}{\partial \overline{z}}$$

By lemma 6 the signs of $\frac{\partial D_i^{**}}{\partial \overline{z}}$ and $\frac{\partial D_j^{**}}{\partial \overline{z}}$ are ambiguous. Thus $\overline{z}$ also has an ambiguous effect on θ_i^{**}. ■

Preposition 8

Proof. The impact of γ and α_i on the equilibrium default probability is given by:

$$\begin{aligned}\frac{\partial \theta_i^{**}}{\partial \gamma} &= f(\widehat{z}_i^{**})\frac{\partial \widehat{z}_i^{**}}{\partial \gamma}\\ \frac{\partial \theta_i^{**}}{\partial \alpha_i} &= f(\widehat{z}_i^{**})\frac{\partial \widehat{z}_i^{**}}{\partial \alpha_i}\end{aligned}$$

where $\frac{\partial \widehat{z}_i^{**}}{\partial \gamma}$ and $\frac{\partial \widehat{z}_i^{**}}{\partial \alpha_i}$are given by (applying the chain rule to (6)):

$$\begin{aligned}
\frac{\partial \widehat{z}_i^{**}}{\partial \gamma} &= \left(\frac{\partial q_i^{**}}{\partial \gamma} + \frac{\partial q_i^{**}}{\partial D_i^{**}}\frac{\partial D_i^{**}}{\partial \gamma} + \frac{\partial q_i^{**}}{\partial D_j^{**}}\frac{\partial D_j^{**}}{\partial \gamma}\right)\frac{\partial \widehat{z}_i}{\partial q_i^{**}} + \\
&\left(\frac{\partial q_j^{**}}{\partial \gamma} + \frac{\partial q_j^{**}}{\partial D_j^{**}}\frac{\partial D_j^{**}}{\partial \gamma} + \frac{\partial q_j^{**}}{\partial D_i^{**}}\frac{\partial D_i^{**}}{\partial \gamma}\right)\frac{\partial \widehat{z}_i}{\partial q_j^{**}} + \frac{\partial \widehat{z}_i}{\partial D_i^{**}}\frac{\partial D_i^{**}}{\partial \gamma} + \frac{\partial \widehat{z}_i}{\gamma} \\
\frac{\partial \widehat{z}_i^{**}}{\partial \alpha_i} &= \left(\frac{\partial q_i^{**}}{\partial \alpha_i} + \frac{\partial q_i^{**}}{\partial D_i^{**}}\frac{\partial D_i^{**}}{\partial \alpha_i} + \frac{\partial q_i^{**}}{\partial D_j^{**}}\frac{\partial D_j^{**}}{\partial \alpha_i}\right)\frac{\partial \widehat{z}_i}{\partial q_i^{**}} + \\
&\left(\frac{\partial q_j^{**}}{\partial \alpha_i} + \frac{\partial q_j^{**}}{\partial D_j^{**}}\frac{\partial D_j^{**}}{\partial \alpha_i} + \frac{\partial q_j^{**}}{\partial D_i^{**}}\frac{\partial D_i^{**}}{\partial \alpha_i}\right)\frac{\partial \widehat{z}_i}{\partial q_j^{**}} + \frac{\partial \widehat{z}_i}{\partial D_i^{**}}\frac{\partial D_i^{**}}{\partial \alpha_i} + \frac{\partial \widehat{z}_i}{\alpha_i}
\end{aligned}$$

Each of the previous expressions can be rewritten as so as to separate the direct impact of the parameter on the second period equilibrium quantities and default probability, and the impact through the equilibrium debt levels, which in turn influence the second period equilibrium. For instance, $\frac{\partial \widehat{z}_i^{**}}{\partial \gamma}$ can be written as

$$\begin{aligned}
&\left(\frac{\partial q_i^{**}}{\partial \gamma}\frac{\partial \widehat{z}_i}{\partial q_i^{**}} + \frac{\partial q_j^{**}}{\partial \gamma}\frac{\partial \widehat{z}_i}{\partial q_j^{**}} + \frac{\partial \widehat{z}_i}{\gamma}\right) + \left(\frac{\partial q_i^{**}}{\partial D_i^{**}}\frac{\partial D_i^{**}}{\partial \gamma} + \frac{\partial q_i^{**}}{\partial D_j^{**}}\frac{\partial D_j^{**}}{\partial \gamma}\right)\frac{\partial \widehat{z}_i}{\partial q_i^{**}} + \\
&\left(\frac{\partial q_j^{**}}{\partial D_j^{**}}\frac{\partial D_j^{**}}{\partial \gamma} + \frac{\partial q_j^{**}}{\partial D_i^{**}}\frac{\partial D_i^{**}}{\partial \gamma}\right)\frac{\partial \widehat{z}_i}{\partial q_j^{**}} + \frac{\partial \widehat{z}_i}{\partial D_i^{**}}\frac{\partial D_i^{**}}{\partial \gamma}.
\end{aligned}$$

The analysis of the expressions presented above, allows us to conclude that the effects of the parameters γ and α_i on the equilibrium default probability are ambiguous, both because the direct impact on the equilibrium quantities is ambiguous and because the impact on the equilibrium debt levels is also ambiguous. ■